TOSHIBA

FILE No. A10-033
Revision 1 : Mar., 2012
Revision 2 : Jul., 2013
Revision 3 : Oct., 2014

AIR CONDITIONER (MULTI TYPE)

SERVICE MANUAL

This service manual provides relevant explanations about new indoor unit (4 series). Please refer to the following service manuals for each indoor units.

Model name:

4-way Cassette Type	(MMU-AP	2H)	**A08-004**
2-way Cassette Type (2 series)	(MMU-AP	2WH)	**A10-007**
Fresh Air Intake Indoor Unit Type	(MMD-AP	1HFE)	**A06-016**
High-wall Type (4 series)	(MMK-AP	4MH)	**A10-034**
High-wall Type (3 series)	(MMK-AP	3H)	**SVM-09059**

Other indoor units (1 series) **A03-009, A03-010, A05-006, A05-007, A06-002**

Indoor unit

<1-way Cassette Type (YH, SH)>
MMU-AP0074YH-E(-TR)
MMU-AP0094YH-E(-TR)
MMU-AP0124YH-E(-TR)
MMU-AP0154SH-E(-TR)
MMU-AP0184SH-E(-TR)
MMU-AP0244SH-E(-TR)

<Concealed Duct High Static Pressure Type>
MMD-AP0184H-E(-TR)
MMD-AP0244H-E(-TR)
MMD-AP0274H-E(-TR)
MMD-AP0364H-E(-TR)
MMD-AP0484H-E(-TR)
MMD-AP0724H-E(-TR)
MMD-AP0964H-E(-TR)

<Floor Standing Concealed Type>
MML-AP0074BH-E(-TR)
MML-AP0094BH-E(-TR)
MML-AP0124BH-E(-TR)
MML-AP0154BH-E(-TR)
MML-AP0184BH-E(-TR)
MML-AP0244BH-E(-TR)

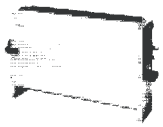

<Compact 4-way Cassette Type>
MMU-AP0054MH-E(-TR)
MMU-AP0074MH-E(-TR)
MMU-AP0094MH-E(-TR)
MMU-AP0124MH-E(-TR)
MMU-AP0154MH-E(-TR)
MMU-AP0184MH-E(-TR)

<Ceiling Type>
MMC-AP0154H-E(-TR)
MMC-AP0184H-E(-TR)
MMC-AP0244H-E(-TR)
MMC-AP0274H-E(-TR)
MMC-AP0364H-E(-TR)
MMC-AP0484H-E(-TR)

<Floor Standing Cabinet Type>
MML-AP0074H-E(-TR)
MML-AP0094H-E(-TR)
MML-AP0124H-E(-TR)
MML-AP0154H-E(-TR)
MML-AP0184H-E(-TR)
MML-AP0244H-E(-TR)

<Slim Duct Type>
MMD-AP0054SPH-E(-TR)
MMD-AP0074SPH-E(-TR)
MMD-AP0094SPH-E(-TR)
MMD-AP0124SPH-E(-TR)
MMD-AP0154SPH-E(-TR)
MMD-AP0184SPH-E(-TR)

<Floor Standing Type>
MMF-AP0154H-E(-TR)
MMF-AP0184H-E(-TR)
MMF-AP0244H-E(-TR)
MMF-AP0274H-E(-TR)
MMF-AP0364H-E(-TR)
MMF-AP0484H-E(-TR)
MMF-AP0564H-E(-TR)

<Concealed Duct Standard Type>
MMD-AP0074BH-E(-TR),
MMD-AP0094BH-E(-TR),
MMD-AP0124BH-E(-TR),
MMD-AP0154BH-E(-TR),
MMD-AP0184BH-E(-TR),
MMD-AP0244BH-E(-TR),
MMD-AP0274BH-E(-TR),
MMD-AP0304BH-E(-TR),
MMD-AP0364BH-E(-TR),
MMD-AP0484BH-E(-TR),
MMD-AP0564BH-E(-TR)

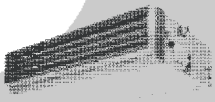

PRINTED IN JAPAN, Mar, 2012, ToMo

Contents

Precautions for Safety 6

Specifications 12

1 Wiring Diagrams 14

1-1. Compact 4-way cassette type 14
1-2. 1-way cassette type (compact type YH) 15
1-3. 1-way cassette type (SH) 16
1-4. Concealed duct standard type 17
1-5. Concealed duct high static pressure type 18
1-6. Slim duct type 20
1-7. Ceiling type 21
1-8. Floor standing cabinet type 22
1-9. Floor standing concealed type 23
1-10. Floor standing type 24

2 Parts Rating 25

2-1. Indoor unit 25

3 Refrigerant Cycle Diagram 29

4 Control Outline 30

5 Applied Control and Functions (Including Circuit Configuration) 37

5-1. Indoor controller block diagram 37
5-1-1. When main (sub) remote controller connected 37
5-1-2. When wireless remote controller kit connected 39
5-1-3. When both main (sub) remote controller and wireless remote controller kit connected . 41
5-2. Indoor printed circuit board 43
5-3. Optional connector specifications of indoor P.C. board 45
5-4. Test operation of indoor unit 46
5-5. Method to set indoor unit function DN code 47
5-6. Applied control of indoor unit 51

6 Troubleshooting 67

6-1. Overview 67
6-2. Troubleshooting method 68
6-3. Troubleshooting based on information displayed on remote controller 74
6-4. Check codes displayed on remote controller and SMMS outdoor unit (7-segment display on I/F board) and locations to be checked 79
6-5. Sensor characteristics 97

7 P.C. Board Exchange Procedures 98

7-1. Replacement of indoor P.C. boards 98

8 Detachments 105

8-1. 1-way cassette (SH) 105

8-2. Compact 4-way cassette 114

8-3. Slim duct 124

8-4. Concealed duct standard. 129

8-5. Concealed duct high static pressure 132

8-6. Ceiling 133

8-7. Floor standing 141

8-8. Floor standing cabinet 144

9 Exploded Diagram / Service Parts List 147

9-1. 1-way cassette type (YH) 147

9-2. 1-Way cassette type (SH) 152

9-3. Compact 4-way cassette type 156

9-4. Slim duct type 160

9-5. Concealed duct standard type. 164

9-6. Concealed duct high static pressure type 178

9-7. Ceiling type 186

9-8. Floor standing type 193

9-9. Floor standing concealed type. 202

9-10. Floor standing cabinet type 208

10 Fan Characteristics 217

Original instruction

Please read carefully through these instructions that contain important information which complies with the “Machinery” Directive (Directive 2006/42/EC), and ensure that you understand them.

Generic Denomination: Air Conditioner

Definition of Qualified Installer or Qualified Service Person

The air conditioner must be installed, maintained, repaired and removed by a qualified installer or qualified service person. When any of these jobs is to be done, ask a qualified installer or qualified service person to do them for you. A qualified installer or qualified service person is an agent who has the qualifications and knowledge described in the table below.

Agent	Qualifications and knowledge which the agent must have
Qualified installer	• The qualified installer is a person who installs, maintains, relocates and removes the air conditioners made by Toshiba Carrier Corporation. He or she has been trained to install, maintain, relocate and remove the air conditioners made by Toshiba Carrier Corporation or, alternatively, he or she has been instructed in such operations by an individual or individuals who have been trained and is thus thoroughly acquainted with the knowledge related to these operations. • The qualified installer who is allowed to do the electrical work involved in installation, relocation and removal has the qualifications pertaining to this electrical work as stipulated by the local laws and regulations, and he or she is a person who has been trained in matters relating to electrical work on the air conditioners made by Toshiba Carrier Corporation or, alternatively, he or she has been instructed in such matters by an individual or individuals who have been trained and is thus thoroughly acquainted with the knowledge related to this work. • The qualified installer who is allowed to do the refrigerant handling and piping work involved in installation, relocation and removal has the qualifications pertaining to this refrigerant handling and piping work as stipulated by the local laws and regulations, and he or she is a person who has been trained in matters relating to refrigerant handling and piping work on the air conditioners made by Toshiba Carrier Corporation or, alternatively, he or she has been instructed in such matters by an individual or individuals who have been trained and is thus thoroughly acquainted with the knowledge related to this work. • The qualified installer who is allowed to work at heights has been trained in matters relating to working at heights with the air conditioners made by Toshiba Carrier Corporation or, alternatively, he or she has been instructed in such matters by an individual or individuals who have been trained and is thus thoroughly acquainted with the knowledge related to this work.
Qualified service person	• The qualified service person is a person who installs, repairs, maintains, relocates and removes the air conditioners made by Toshiba Carrier Corporation. He or she has been trained to install, repair, maintain, relocate and remove the air conditioners made by Toshiba Carrier Corporation or, alternatively, he or she has been instructed in such operations by an individual or individuals who have been trained and is thus thoroughly acquainted with the knowledge related to these operations. • The qualified service person who is allowed to do the electrical work involved in installation, repair, relocation and removal has the qualifications pertaining to this electrical work as stipulated by the local laws and regulations, and he or she is a person who has been trained in matters relating to electrical work on the air conditioners made by Toshiba Carrier Corporation or, alternatively, he or she has been instructed in such matters by an individual or individuals who have been trained and is thus thoroughly acquainted with the knowledge related to this work. • The qualified service person who is allowed to do the refrigerant handling and piping work involved in installation, repair, relocation and removal has the qualifications pertaining to this refrigerant handling and piping work as stipulated by the local laws and regulations, and he or she is a person who has been trained in matters relating to refrigerant handling and piping work on the air conditioners made by Toshiba Carrier Corporation or, alternatively, he or she has been instructed in such matters by an individual or individuals who have been trained and is thus thoroughly acquainted with the knowledge related to this work. • The qualified service person who is allowed to work at heights has been trained in matters relating to working at heights with the air conditioners made by Toshiba Carrier Corporation or, alternatively, he or she has been instructed in such matters by an individual or individuals who have been trained and is thus thoroughly acquainted with the knowledge related to this work.

Definition of Protective Gear

When the air conditioner is to be transported, installed, maintained, repaired or removed, wear protective gloves and 'safety' work clothing.
In addition to such normal protective gear, wear the protective gear described below when undertaking the special work detailed in the table below.
Failure to wear the proper protective gear is dangerous because you will be more susceptible to injury, burns, electric shocks and other injuries.

Work undertaken	Protective gear worn
All types of work	Protective gloves 'Safety' working clothing
Electrical-related work	Gloves to provide protection for electricians and from heat Insulating shoes Clothing to provide protection from electric shock
Work done at heights (50 cm or more)	Helmets for use in industry
Transportation of heavy objects	Shoes with additional protective toe cap
Repair of outdoor unit	Gloves to provide protection for electricians and from heat

The important contents concerned to the safety are described on the product itself and on this Service Manual. Please read this Service Manual after understanding the described items thoroughly in the following contents (Indications / Illustrated marks), and keep them.

[Explanation of indications]

Indication	Explanation
⚠ **DANGER**	Indicates contents assumed that an imminent danger causing a death or serious injury of the repair engineers and the third parties when an incorrect work has been executed.
⚠ **WARNING**	Indicates possibilities assumed that a danger causing a death or serious injury of the repair engineers, the third parties, and the users due to troubles of the product after work when an incorrect work has been executed.
⚠ **CAUTION**	Indicates contents assumed that an injury or property damage (*) may be caused on the repair engineers, the third parties, and the users due to troubles of the product after work when an incorrect work has been executed.

* Property damage: Enlarged damage concerned to property, furniture, and domestic animal / pet

[Explanation of illustrated marks]

Mark	Explanation
⃠	Indicates prohibited items (Forbidden items to do) The sentences near an illustrated mark describe the concrete prohibited contents.
●	Indicates mandatory items (Compulsory items to do) The sentences near an illustrated mark describe the concrete mandatory contents.
△	Indicates cautions (Including danger / warning) The sentences or illustration near or in an illustrated mark describe the concrete cautious contents.

Warning Indications on the Air Conditioner Unit
[Confirmation of warning label on the main unit]
Confirm that labels are indicated on the specified positions
If removing the label during parts replace, stick it as the original.

Warning indication	Description
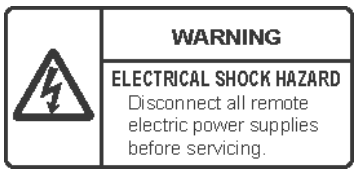	**WARNING** **ELECTRICAL SHOCK HAZARD** Disconnect all remote electric power supplies before servicing.
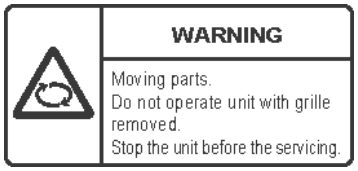	**WARNING** Moving parts. Do not operate unit with grille removed. Stop the unit before the servicing.
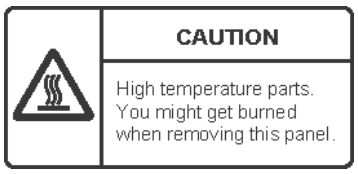	**CAUTION** High temperature parts. You might get burned when removing this panel.
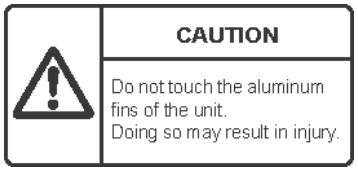	**CAUTION** Do not touch the aluminium fins of the unit. Doing so may result in injury.
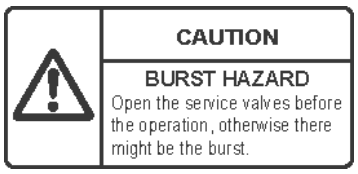	**CAUTION** **BURST HAZARD** Open the service valves before the operation, otherwise there might be the burst.
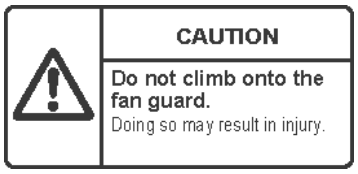	**CAUTION** **Do not climb onto the fan guard.** Doing so may result in injury.

Precautions for Safety

The manufacturer shall not assume any liability for the damage caused by not observing the description of this manual.

⚠ DANGER

Turn off breaker.	Before carrying out the installation, maintenance, repair or removal work, be sure to set the circuit breaker for both the indoor and outdoor units to the OFF position. Otherwise, electric shocks may result.
	Before opening the intake grille of the indoor unit or service panel of the outdoor unit, set the circuit breaker to the OFF position. Failure to set the circuit breaker to the OFF position may result in electric shocks through contact with the interior parts. Only a qualified installer (*1) or qualified service person (*1) is allowed to remove the intake grille of the indoor unit or service panel of the outdoor unit and do the work required.
	Before starting to repair the outdoor unit fan or fan guard, be absolutely sure to set the circuit breaker to the OFF position, and place a “Work in progress” sign on the circuit breaker.
	When cleaning the filter or other parts of the indoor unit, set the circuit breaker to OFF without fail, and place a “Work in progress” sign near the circuit breaker before proceeding with the work.
	When you have noticed that some kind of trouble (such as when an error display has appeared, there is a smell of burning, abnormal sounds are heard, the air conditioner fails to cool or heat or water is leaking) has occurred in the air conditioner, do not touch the air conditioner yourself but set the circuit breaker to the OFF position, and contact a qualified service person. Take steps to ensure that the power will not be turned on (by marking “out of service” near the circuit breaker, for instance) until qualified service person arrives. Continuing to use the air conditioner in the trouble status may cause mechanical problems to escalate or result in electric shocks or other failure.
Electric shock hazard	When you access inside of the service panel to repair electric parts, wait for about five minutes after turning off the breaker. Do not start repairing immediately.Otherwise you may get electric shock by touching terminals of high-voltage capacitors. Natural discharge of the capacitor takes about five minutes.
Prohibition	Place a “Work in progress” sign near the circuit breaker while the installation, maintenance, repair or removal work is being carried out. There is a danger of electric shocks if the circuit breaker is set to ON by mistake.
	Before operating the air conditioner after having completed the work, check that the electrical parts box cover of the indoor unit and service panel of the outdoor unit are closed, and set the circuit breaker to the ON position. You may receive an electric shock if the power is turned on without first conducting these checks.
Stay on protection	If, in the course of carrying out repairs, it becomes absolutely necessary to check out the electrical parts with the electrical parts box cover of one or more of the indoor units and the service panel of the outdoor unit removed in order to find out exactly where the trouble lies, wear insulated heat-resistant gloves, insulated boots and insulated work overalls, and take care to avoid touching any live parts. You may receive an electric shock if you fail to heed this warning. Only qualified service person (*1) is allowed to do this kind of work.

⚠ WARNING

General	Before starting to repair the air conditioner, read carefully through the Service Manual, and repair the air conditioner by following its instructions.
	Only qualified service person (*1) is allowed to repair the air conditioner. Repair of the air conditioner by unqualified person may give rise to a fire, electric shocks, injury, water leaks and / or other problems.
	Do not use any refrigerant different from the one specified for complement or replacement. Otherwise, abnormally high pressure may be generated in the refrigeration cycle, which may result in a failure or explosion of the product or an injury to your body.
	Only a qualified installer (*1) or qualified service person (*1) is allowed to carry out the electrical work of the air conditioner. Under no circumstances must this work be done by an unqualified individual since failure to carry out the work properly may result in electric shocks and / or electrical leaks.
	When transporting the air conditioner, wear shoes with protective toe caps, protective gloves and other protective clothing.
	When connecting the electrical wires, repairing the electrical parts or undertaking other electrical jobs, wear gloves to provide protection for electricians and from heat, insulating shoes and clothing to provide protection from electric shocks. Failure to wear this protective gear may result in electric shocks.
	Electrical wiring work shall be conducted according to law and regulation in the community and installation manual. Failure to do so may result in electrocution or short circuit.
	Only a qualified installer (*1) or qualified service person (*1) is allowed to undertake work at heights using a stand of 50 cm or more or to remove the intake grille of the indoor unit to undertake work.
	When working at heights, use a ladder which complies with the ISO 14122 standard, and follow the procedure in the ladder's instructions. Also wear a helmet for use in industry as protective gear to undertake the work.
	When working at heights, put a sign in place so that no-one will approach the work location, before proceeding with the work. Parts and other objects may fall from above, possibly injuring a person below.
	When executing address setting, test run, or troubleshooting through the checking window on the electric parts box, put on insulated gloves to provide protection from electric shock. Otherwise you may receive an electric shock.
	Do not touch the aluminum fin of the outdoor unit. You may injure yourself if you do so. If the fin must be touched for some reason, first put on protective gloves and safety work clothing, and then proceed.
	Do not climb onto or place objects on top of the outdoor unit. You may fall or the objects may fall off of the outdoor unit and result in injury.
	When transporting the air conditioner, wear shoes with additional protective toe caps.
	When transporting the air conditioner, do not take hold of the bands around the packing carton. You may injure yourself if the bands should break.
	Be sure that a heavy unit (10 kg or heavier) such as a compressor is carried by two persons.
	This air conditioner has passed the pressure test as specified in IEC 60335-2-40 Annex EE.
Check earth wires.	Before troubleshooting or repair work, check the earth wire is connected to the earth terminals of the main unit, otherwise an electric shock is caused when a leak occurs.If the earth wire is not correctly connected, contact an electric engineer for rework.
	After completing the repair or relocation work, check that the ground wires are connected properly.
	Be sure to connect earth wire. (Grounding work) Incomplete grounding causes an electric shock. Do not connect ground wires to gas pipes, water pipes, and lightning rods or ground wires for telephone wires.
Prohibition of modification.	Do not modify the products.Do not also disassemble or modify the parts. It may cause a fire, electric shock or injury.
Use specified parts.	When any of the electrical parts are to be replaced, ensure that the replacement parts satisfy the specifications given in the Service Manual (or use the parts contained on the parts list in the Service Manual). Use of any parts which do not satisfy the required specifications may give rise to electric shocks, smoking and / or a fire.

Do not bring a child close to the equipment.	If, in the course of carrying out repairs, it becomes absolutely necessary to check out the electrical parts with the electrical parts box cover of one or more of the indoor units and the service panel of the outdoor unit removed in order to find out exactly where the trouble lies, put a sign in place so that no-one will approach the work location before proceeding with the work. Third-party individuals may enter the work site and receive electric shocks if this warning is not heeded.
Insulating measures	Connect the cut-off lead wires with crimp contact, etc., put the closed end side upward and then apply a water-cut method, otherwise a leak or production of fire is caused at the users' side.
No fire	When performing repairs using a gas burner, replace the refrigerant with nitrogen gas because the oil that coats the pipes may otherwise burn. When repairing the refrigerating cycle, take the following measures. 1) Be attentive to fire around the cycle. When using a gas stove, etc., be sure to put out fire before work; otherwise the oil mixed with refrigerant gas may catch fire. 2) Do not use a welder in the closed room. When using it without ventilation, carbon monoxide poisoning may be caused. 3) Do not bring inflammables close to the refrigerant cycle, otherwise fire of the welder may catch the inflammables.
Refrigerant	The refrigerant used by this air conditioner is the R410A.
	Check the used refrigerant name and use tools and materials of the parts which match with it. For the products which use R410A refrigerant, the refrigerant name is indicated at a position on the outdoor unit where is easy to see. To prevent miss-charging, the route of the service port is changed from one of the former R22.
	For an air conditioner which uses R410A, never use other refrigerant than R410A. For an air conditioner which uses other refrigerant (R22, etc.), never use R410A. If different types of refrigerant are mixed, abnormal high pressure generates in the refrigerating cycle and an injury due to breakage may be caused.
	When the air conditioner has been installed or relocated, follow the instructions in the Installation Manual and purge the air completely so that no gases other than the refrigerant will be mixed in the refrigerating cycle. Failure to purge the air completely may cause the air conditioner to malfunction.
	Do not charge refrigerant additionally. If charging refrigerant additionally when refrigerant gas leaks, the refrigerant composition in the refrigerating cycle changes resulted in change of air conditioner characteristics or refrigerant over the specified standard amount is charged and an abnormal high pressure is applied to the inside of the refrigerating cycle resulted in cause of breakage or injury. Therefore if the refrigerant gas leaks, recover the refrigerant in the air conditioner, execute vacuuming, and then newly recharge the specified amount of liquid refrigerant. In this time, never charge the refrigerant over the specified amount.
	When recharging the refrigerant in the refrigerating cycle, do not mix the refrigerant or air other than R410A into the specified refrigerant. If air or others is mixed with the refrigerant, abnormal high pressure generates in the refrigerating cycle resulted in cause of injury due to breakage.
	After installation work, check the refrigerant gas does not leak. If the refrigerant gas leaks in the room, poisonous gas generates when gas touches to fire such as fan heater, stove or cocking stove though the refrigerant gas itself is innocuous.
	Never recover the refrigerant into the outdoor unit. When the equipment is moved or repaired, be sure to recover the refrigerant with recovering device. The refrigerant cannot be recovered in the outdoor unit; otherwise a serious accident such as breakage or injury is caused.
Assembly / Wiring	After repair work, surely assemble the disassembled parts, and connect and lead the removed wires as before. Perform the work so that the cabinet or panel does not catch the inner wires. If incorrect assembly or incorrect wire connection was done, a disaster such as a leak or fire is caused at user's side.
Insulator check	After the work has finished, be sure to use an insulation tester set (500 V Megger) to check the resistance is 1 MΩ or more between the charge section and the non-charge metal section (Earth position). If the resistance value is low, a disaster such as a leak or electric shock is caused at user's side.
Ventilation	When the refrigerant gas leaks during work, execute ventilation. If the refrigerant gas touches to a fire, poisonous gas generates. A case of leakage of the refrigerant and the closed room full with gas is dangerous because a shortage of oxygen occurs. Be sure to execute ventilation.

Compulsion	When the refrigerant gas leaks, find up the leaked position and repair it surely. If the leaked position cannot be found up and the repair work is interrupted, pump-down and tighten the service valve, otherwise the refrigerant gas may leak into the room. The poisonous gas generates when gas touches to fire such as fan heater, stove or cocking stove though the refrigerant gas itself is innocuous. When installing equipment which includes a large amount of charged refrigerant such as a multi air conditioner in a sub-room, it is necessary that the density does not the limit even if the refrigerant leaks. If the refrigerant leaks and exceeds the limit density, an accident of shortage of oxygen is caused.
	Tighten the flare nut with a torque wrench in the specified manner. Excessive tighten of the flare nut may cause a crack in the flare nut after a long period, which may result in refrigerant leakage.
	Nitrogen gas must be used for the airtight test.
	The charge hose must be connected in such a way that it is not slack.
	For the installation / moving / reinstallation work, follow to the Installation Manual. If an incorrect installation is done, a trouble of the refrigerating cycle, water leak, electric shock or fire is caused.
Check after repair	Once the repair work has been completed, check for refrigerant leaks, and check the insulation resistance and water drainage. Then perform a trial run to check that the air conditioner is running properly.
	After repair work has finished, check there is no trouble. If check is not executed, a fire, electric shock or injury may be caused. For a check, turn off the power breaker.
	After repair work (installation of front panel and cabinet) has finished, execute a test run to check there is no generation of smoke or abnormal sound. If check is not executed, a fire or an electric shock is caused. Before test run, install the front panel and cabinet.
	Be sure to fix the screws back which have been removed for installation or other purposes.
Do not operate the unit with the valve closed.	Check the following matters before a test run after repairing piping. • Connect the pipes surely and there is no leak of refrigerant. • The valve is opened. Running the compressor under condition that the valve closes causes an abnormal high pressure resulted in damage of the parts of the compressor and etc. and moreover if there is leak of refrigerant at connecting section of pipes, the air is sucked and causes further abnormal high pressure resulted in burst or injury.
Check after reinstallation	Only a qualified installer (*1) or qualified service person (*1) is allowed to relocate the air conditioner. It is dangerous for the air conditioner to be relocated by an unqualified individual since a fire, electric shocks, injury, water leakage, noise and / or vibration may result.
	Check the following items after reinstallation. 1) The earth wire is correctly connected. 2) The power cord is not caught in the product. 3) There is no inclination or unsteadiness and the installation is stable. If check is not executed, a fire, an electric shock or an injury is caused.
	When carrying out the pump-down work shut down the compressor before disconnecting the refrigerant pipe. Disconnecting the refrigerant pipe with the service valve left open and the compressor still operating will cause air, etc. to be sucked in, raising the pressure inside the refrigeration cycle to an abnormally high level, and possibly resulting in reputing, injury, etc.
Cooling check	When the service panel of the outdoor unit is to be opened in order for the compressor or the area around this part to be repaired immediately after the air conditioner has been shut down, set the circuit breaker to the OFF position, and then wait at least 10 minutes before opening the service panel. If you fail to heed this warning, you will run the risk of burning yourself because the compressor pipes and other parts will be very hot to the touch. In addition, before proceeding with the repair work, wear the kind of insulated heat-resistant gloves designed to protect electricians.
	Take care not to get burned by compressor pipes or other parts when checking the cooling cycle while running the unit as they get heated while running. Be sure to put on gloves providing protection for electric shock and heat.
	When the service panel of the outdoor unit is to be opened in order for the fan motor, reactor, inverter or the areas around these parts to be repaired immediately after the air conditioner has been shut down, set the circuit breaker to the OFF position, and then wait at least 10 minutes before opening the service panel. If you fail to heed this warning, you will run the risk of burning yourself because the fan motor, reactor, inverter heat sink and other parts will be very hot to the touch. In addition, before proceeding with the repair work, wear the kind of insulated heat-resistant gloves designed to protect electricians.

Installation	Only a qualified installer (*1) or qualified service person (*1) is allowed to install the air conditioner. If the air conditioner is installed by an unqualified individual, a fire, electric shocks, injury, water leakage, noise and / or vibration may result.
	Before starting to install the air conditioner, read carefully through the Installation Manual, and follow its instructions to install the air conditioner.
	Be sure to use the company-specified products for the separately purchased parts. Use of non-specified products may result in fire, electric shock, water leakage or other failure. Have the installation performed by a qualified installer.
	Do not supply power from the power terminal block equipped on the outdoor unit to another outdoor unit. Capacity overflow may occur on the terminal block and may result in fire.
	Do not install the air conditioner in a location that may be subject to a risk of expire to a combustible gas. If a combustible gas leaks and becomes concentrated around the unit, a fire may occur.
	Install the indoor unit at least 2.5 m above the floor level since otherwise the users may injure themselves or receive electric shocks if they poke their fingers or other objects into the indoor unit while the air conditioner is running.
	Install a circuit breaker that meets the specifications in the installation manual and the stipulations in the local regulations and laws.
	Install the circuit breaker where it can be easily accessed by the qualified service person (*1).
	If you install the unit in a small room, take appropriate measures to prevent the refrigerant from exceeding the limit concentration even if it leaks. Consult the dealer from whom you purchased the air conditioner when you implement the measures. Accumulation of highly concentrated refrigerant may cause an oxygen deficiency accident.
	Do not place any combustion appliance in a place where it is directly exposed to the wind of air conditioner, otherwise it may cause imperfect combustion.

Explanations given to user

If you have discovered that the fan grille is damaged, do not approach the outdoor unit but set the circuit breaker to the OFF position, and contact a qualified service person to have the repairs done.
Do not set the circuit breaker to the ON position until the repairs are completed.

Relocation

- Only a qualified installer (*1) or qualified service person (*1) is allowed to relocate the air conditioner.
  It is dangerous for the air conditioner to be relocated by an unqualified individual since a fire, electric shocks, injury, water leakage, noise and / or vibration may result.
- When carrying out the pump-down work shut down the compressor before disconnecting the refrigerant pipe.
  Disconnecting the refrigerant pipe with the service valve left open and the compressor still operating will cause air, etc. to be sucked in, raising the pressure inside the refrigeration cycle to an abnormally high level, and possibly resulting in reputing, injury, etc.

(*1) Refer to the “Definition of Qualified Installer or Qualified Service Person”

Declaration of Conformity

Manufacturer: Toshiba Carrier Corporation
336 Tadehara, Fuji-shi, Shizuoka-ken 416-8521 JAPAN

Authorized Representative / TCF holder: Nick Ball
Toshiba EMEA Engineering Director
Toshiba Carrier UK Ltd.
Porsham Close, Belliver Industrial Estate,
PLYMOUTH, Devon, PL6 7DB.
United Kingdom

Hereby declares that the machinery described below:

Generic Denomination: Air Conditioner

Model / type:

Indoor unit

<1-way Cassette Type (YH, SH)>
MMU-AP0074YH-E(TR), MMU-AP0094YH-E(TR), MMU-AP0124YH-E(TR),
MMU-AP0154SH-E(TR), MMU-AP0184SH-E(TR), MMU-AP0244SH-E(TR)

<Compact 4-way Cassette Type>
MMU-AP0054MH-E(TR), MMU-AP0074MH-E(TR), MMU-AP0094MH-E(TR), MMU-AP0124MH-E(TR),
MMU-AP0154MH-E(TR), MMU-AP0184MH-E(TR)

<Slim Duct Type>
MMD-AP0054SPH-E(TR), MMD-AP0074SPH-E(TR), MMD-AP0094SPH-E(TR), MMD-AP0124SPH-E(TR),
MMD-AP0154SPH-E(TR), MMD-AP0184SPH-E(TR)

<Concealed Duct Standard Type>
MMD-AP0074BH-E(TR), MMD-AP0094BH-E(TR), MMD-AP0124BH-E(TR), MMD-AP0154BH-E(TR),
MMD-AP0184BH-E(TR), MMD-AP0244BH-E(TR), MMD-AP0274BH-E(TR), MMD-AP0304BH-E(TR),
MMD-AP0364BH-E(TR), MMD-AP0484BH-E(TR), MMD-AP0564BH-E(TR)

<Concealed Duct High Static Pressure Type>
MMD-AP0184H-E(TR), MMD-AP0244H-E(TR), MMD-AP0274H-E(TR), MMD-AP0364H-E(TR),
MMD-AP0484H-E(TR), MMD-AP0724H-E(TR), MMD-AP0964H-E(TR)

<Ceiling Type>
MMC-AP0154H-E(TR), MMC-AP0184H-E(TR), MMC-AP0244H-E(TR), MMC-AP0274H-E(TR),
MMC-AP0364H-E(TR), MMC-AP0484H-E(TR)

<Floor Standing Type>
MMF-AP0154H-E(TR), MMF-AP0184H-E(TR), MMF-AP0244H-E(TR), MMF-AP0274H-E(TR),
MMF-AP0364H-E(TR), MMF-AP0484H-E(TR), MMF-AP0564H-E(TR)

<Floor Standing Concealed Type>
MML-AP0074BH-E(TR), MML-AP0094BH-E(TR), MML-AP0124BH-E(TR), MML-AP0154BH-E(TR),
MML-AP0184BH-E(TR), MML-AP0244BH-E(TR)

<Floor Standing Cabinet Type>
MML-AP0074H-E(TR), MML-AP0094H-E(TR), MML-AP0124H-E(TR), MML-AP0154H-E(TR),
MML-AP0184H-E(TR), MML-AP0244H-E(TR)

Commercial name: Super Modular Multi System Air Conditioner
Super Heat Recovery Multi System Air Conditioner
MiNi-Super Modular Multi System Air Conditioner (MiNi-SMMS series)

Complies with the provisions of the “Machinery” Directive (Directive 2006/42/EC) and the regulations transposing into national law

Complies with the provisions of the following harmonized standard:

EN 378-2: 2008+A2:2012

NOTE

This declaration becomes invalid if technical or operational modifications are introduced without the manufacturer’s consent.

Specifications

Model	Sound power level (dBA)		Weight (kg) Main unit (Ceiling panel)
	Cooling	Heating	
MMU-AP0054MH-E	*	*	17 (3)
MMU-AP0074MH-E	*	*	17 (3)
MMU-AP0094MH-E	*	*	17 (3)
MMU-AP0124MH-E	*	*	17 (3)
MMU-AP0154MH-E	*	*	17 (3)
MMU-AP0184MH-E	*	*	17 (3)
MMU-AP0074YH-E	*	*	22 (3.5)
MMU-AP0094YH-E	*	*	22 (3.5)
MMU-AP0124YH-E	*	*	22 (3.5)
MMU-AP0154SH-E	*	*	21 (5.5)
MMU-AP0184SH-E	*	*	21 (5.5)
MMU-AP0244SH-E	*	*	22 (5.5)
MMD-AP0074BH-E	*	*	28
MMD-AP0094BH-E	*	*	28
MMD-AP0124BH-E	*	*	28
MMD-AP0154BH-E	*	*	32
MMD-AP0184BH-E	*	*	32
MMD-AP0244BH-E	*	*	43
MMD-AP0274BH-E	*	*	43
MMD-AP0304BH-E	*	*	43
MMD-AP0364BH-E	*	*	55
MMD-AP0484BH-E	*	*	55
MMD-AP0564BH-E	*	*	55
MMD-AP0184H-E	*	*	50
MMD-AP0244H-E	*	*	52
MMD-AP0274H-E	*	*	52
MMD-AP0364H-E	*	*	56
MMD-AP0484H-E	*	*	67
MMD-AP0724H-E	*	*	160
MMD-AP0964H-E	70	70	160
MMD-AP0054SPH-E	*	*	22
MMD-AP0074SPH-E	*	*	22
MMD-AP0094SPH-E	*	*	22
MMD-AP0124SPH-E	*	*	22
MMD-AP0154SPH-E	*	*	23
MMD-AP0184SPH-E	*	*	23
MMC-AP0154H-E	*	*	22
MMC-AP0184H-E	*	*	22
MMC-AP0244H-E	*	*	26
MMC-AP0274H-E	*	*	26
MMC-AP0364H-E	*	*	34
MMC-AP0484H-E	*	*	34
MML-AP0074H-E	*	*	37
MML-AP0094H-E	*	*	37
MML-AP0124H-E	*	*	37
MML-AP0154H-E	*	*	37
MML-AP0184H-E	*	*	40
MML-AP0244H-E	*	*	40
MML-AP0074BH-E	*	*	21
MML-AP0094BH-E	*	*	21
MML-AP0124BH-E	*	*	21
MML-AP0154BH-E	*	*	29
MML-AP0184BH-E	*	*	29
MML-AP0244BH-E	*	*	29
MMF-AP0154H-E	*	*	48
MMF-AP0184H-E	*	*	48
MMF-AP0244H-E	*	*	49
MMF-AP0274H-E	*	*	49
MMF-AP0364H-E	*	*	65
MMF-AP0484H-E	72	72	65
MMF-AP0564H-E	72	72	65

Model	Sound power level (dBA)		Weight (kg) Main unit (Ceiling panel)
	Cooling	Heating	
MMU-AP0054MH-TR	*	*	17 (3)
MMU-AP0074MH-TR	*	*	17 (3)
MMU-AP0094MH-TR	*	*	17 (3)
MMU-AP0124MH-TR	*	*	17 (3)
MMU-AP0154MH-TR	*	*	17 (3)
MMU-AP0184MH-TR	*	*	17 (3)
MMU-AP0074YH-TR	*	*	22 (3.5)
MMU-AP0094YH-TR	*	*	22 (3.5)
MMU-AP0124YH-TR	*	*	22 (3.5)
MMU-AP0154SH-TR	*	*	21 (5.5)
MMU-AP0184SH-TR	*	*	21 (5.5)
MMU-AP0244SH-TR	*	*	22 (5.5)
MMD-AP0074BH-TR	*	*	28
MMD-AP0094BH-TR	*	*	28
MMD-AP0124BH-TR	*	*	28
MMD-AP0154BH-TR	*	*	32
MMD-AP0184BH-TR	*	*	32
MMD-AP0244BH-TR	*	*	43
MMD-AP0274BH-TR	*	*	43
MMD-AP0304BH-TR	*	*	43
MMD-AP0364BH-TR	*	*	55
MMD-AP0484BH-TR	*	*	55
MMD-AP0564BH-TR	*	*	55
MMD-AP0184H-TR	*	*	50
MMD-AP0244H-TR	*	*	52
MMD-AP0274H-TR	*	*	52
MMD-AP0364H-TR	*	*	56
MMD-AP0484H-TR	*	*	67
MMD-AP0724H-TR	*	*	160
MMD-AP0964H-TR	70	70	160
MMD-AP0054SPH-TR	*	*	22
MMD-AP0074SPH-TR	*	*	22
MMD-AP0094SPH-TR	*	*	22
MMD-AP0124SPH-TR	*	*	22
MMD-AP0154SPH-TR	*	*	23
MMD-AP0184SPH-TR	*	*	23
MMC-AP0154H-TR	*	*	22
MMC-AP0184H-TR	*	*	22
MMC-AP0244H-TR	*	*	26
MMC-AP0274H-TR	*	*	26
MMC-AP0364H-TR	*	*	34
MMC-AP0484H-TR	*	*	34
MML-AP0074H-TR	*	*	37
MML-AP0094H-TR	*	*	37
MML-AP0124H-TR	*	*	37
MML-AP0154H-TR	*	*	37
MML-AP0184H-TR	*	*	40
MML-AP0244H-TR	*	*	40
MML-AP0074BH-TR	*	*	21
MML-AP0094BH-TR	*	*	21
MML-AP0124BH-TR	*	*	21
MML-AP0154BH-TR	*	*	29
MML-AP0184BH-TR	*	*	29
MML-AP0244BH-TR	*	*	29
MMF-AP0154H-TR	*	*	48
MMF-AP0184H-TR	*	*	48
MMF-AP0244H-TR	*	*	49
MMF-AP0274H-TR	*	*	49
MMF-AP0364H-TR	*	*	65
MMF-AP0484H-TR	72	72	65
MMF-AP0564H-TR	72	72	65

1 Wiring Diagrams

1-1. Compact 4-way cassette type

Models: MMU-AP0054MH-E(TR), AP0074MH-E(TR), AP0094MH-E(TR), AP0124MH-E(TR), AP0154MH-E(TR), AP0184MH-E(TR)

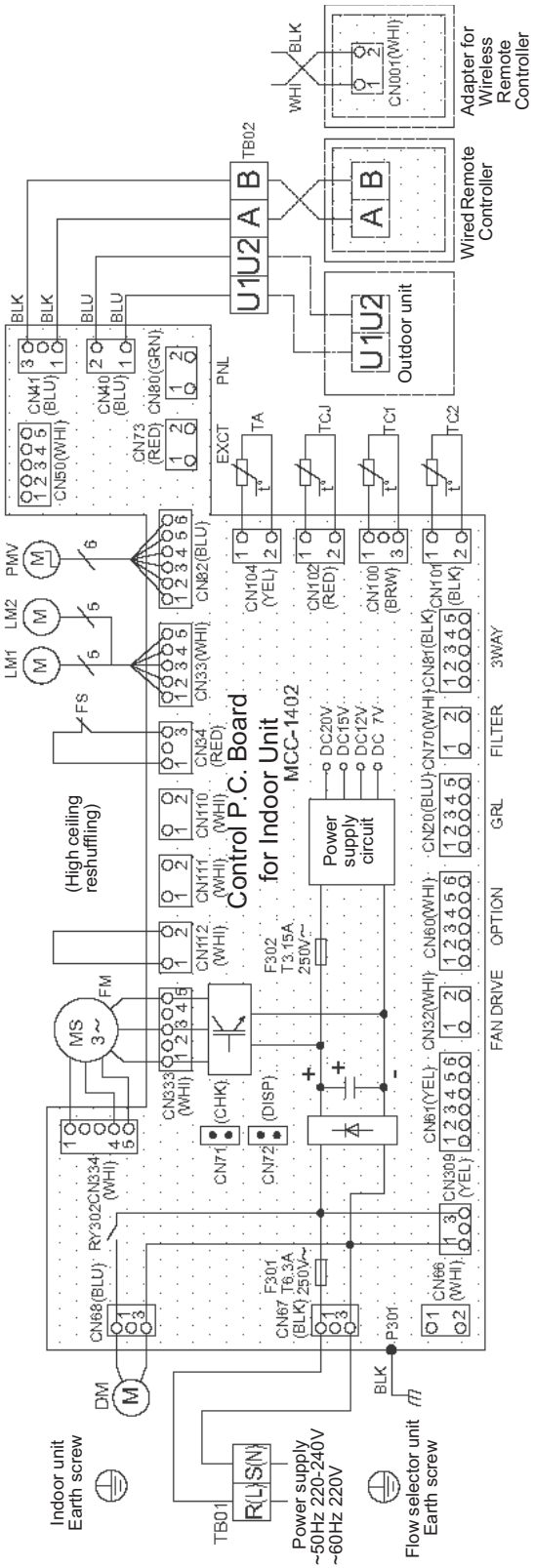

1. Broken line indicate the wiring at site.
   Long dashed short dashed line indicate the accessories.
2. ☐ indicates the terminal block.
   —o— indicates the connection terminal.
   o o indicates the connector on the control P.C. board.
3. ⏚ indicates the protection ground.
4. ▭ indicates the control P.C. board.

COLOR IDENTIFICATION
RED : RED
WHI : WHITE
YEL : YELLOW
BLU : BLUE
BLK : BLACK
GRY : GRAY
PNK : PINK
ORN : ORANGE
BRW : BROWN
GRN : GREEN

Symbol	Parts Name
CN**	Connector
DM	Drain Pump Motor
F301,302	Fuse
FM	Fan Motor
FS	Float Switch
LM1,2	Louver Motor
PMV	Pulse Motor Valve
RY302	Drain Control Relay
TA	Indoor temp sensor
TB01,02	Terminal Block
TC1,2,TCJ	Temp sensor

1-2. 1-way cassette type (compact type YH)

Models: MMU-AP0074YH-E(TR), AP0094YH-E(TR), AP0124YH-E(TR)

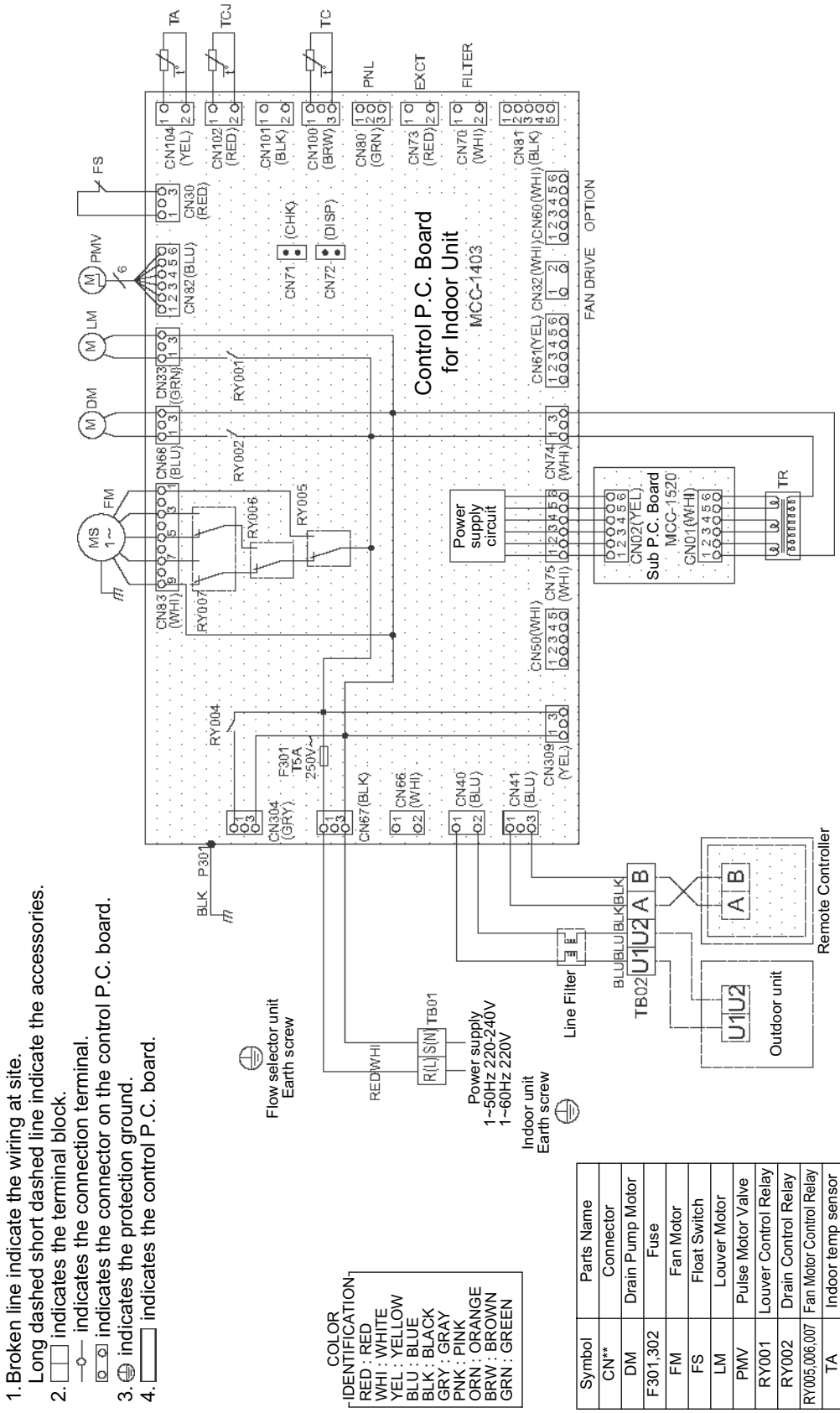

1. Broken line indicate the wiring at site.
   Long dashed short dashed line indicate the accessories.
2. indicates the terminal block.
   indicates the connection terminal.
3. indicates the connector on the control P.C. board.
4. indicates the protection ground.
   indicates the control P.C. board.

COLOR IDENTIFICATION
RED : RED
WHI : WHITE
YEL : YELLOW
BLU : BLUE
BLK : BLACK
GRY : GRAY
PNK : PINK
ORN : ORANGE
BRW : BROWN
GRN : GREEN

Symbol	Parts Name
CN**	Connector
DM	Drain Pump Motor
F301,302	Fuse
FM	Fan Motor
FS	Float Switch
LM	Louver Motor
PMV	Pulse Motor Valve
RY001	Louver Control Relay
RY002	Drain Control Relay
RY005,006,007	Fan Motor Control Relay
TA	Indoor temp sensor
TB01,02	Terminal Block
TC,TCJ	Temp sensor
TR	Transformer

1-3. 1-way cassette type (SH)

Models: MMU-AP0154SH-E(TR), AP0184SH-E(TR), AP0244SH-E(TR)

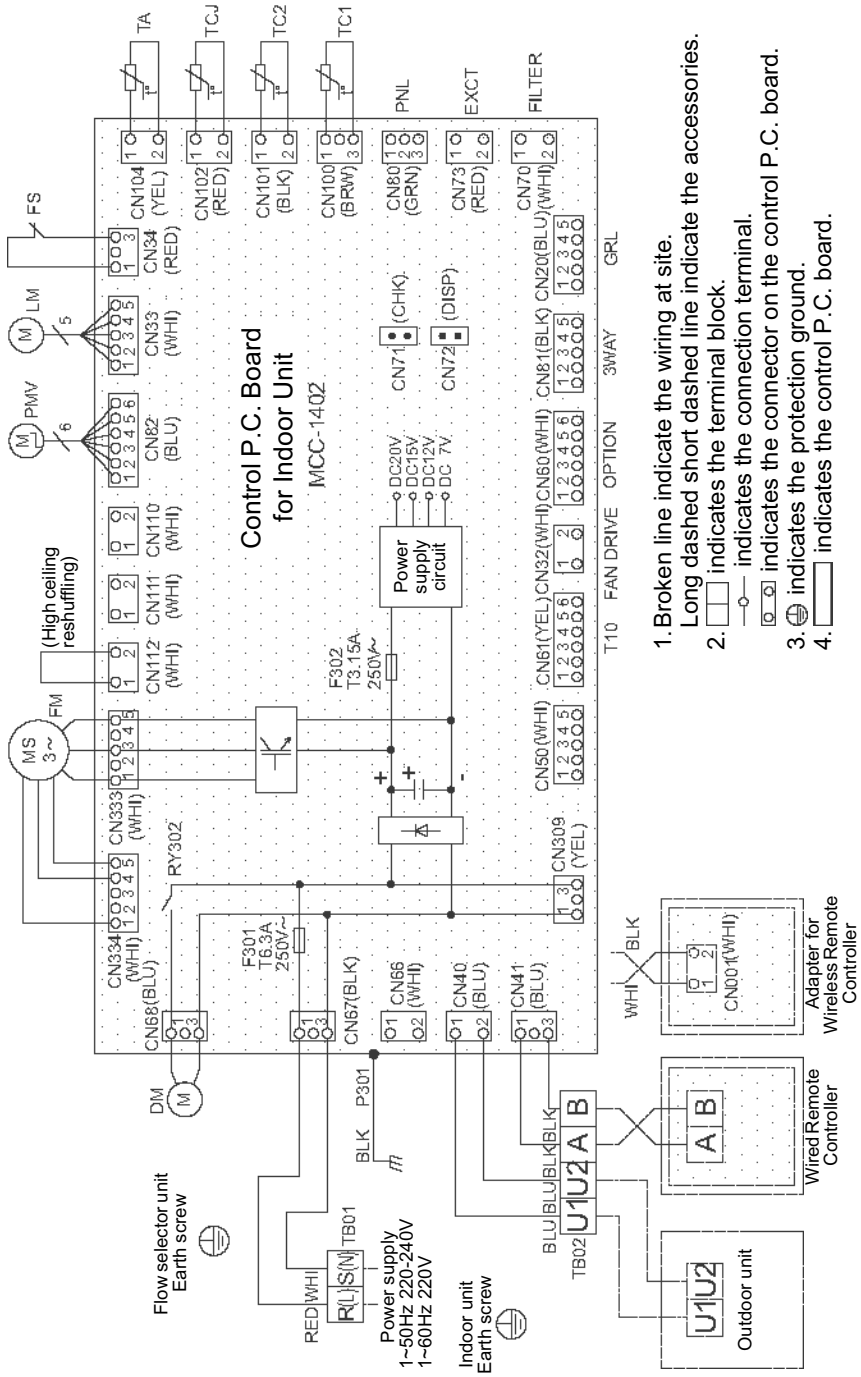

Symbol	Parts Name
CN**	Connector
DM	Drain Pump Motor
F301,302	Fuse
FM	Fan Motor
FS	Float Switch
LM	Louver Motor
PMV	Pulse Motor Valve
RY302	Drain Control Relay
TA	Indoor temp sensor
TB01,02	Terminal Block
TC1,2,TCJ	Temp sensor

COLOR IDENTIFICATION
RED : RED
WHI : WHITE
YEL : YELLOW
BLU : BLUE
BLK : BLACK
GRY : GRAY
PNK : PINK
ORN : ORANGE
BRW : BROWN
GRN : GREEN

1-4. Concealed duct standard type

Models: MMD-AP0074BH-E(TR), AP0094BH-E(TR), AP0124BH-E(TR), AP0154BH-E(TR), AP0184BH-E(TR), AP0244BH-E(TR), AP0274BH-E(TR), AP0304BH-E(TR), AP0364BH-E(TR), AP0484BH-E(TR), AP0564BH-E(TR)

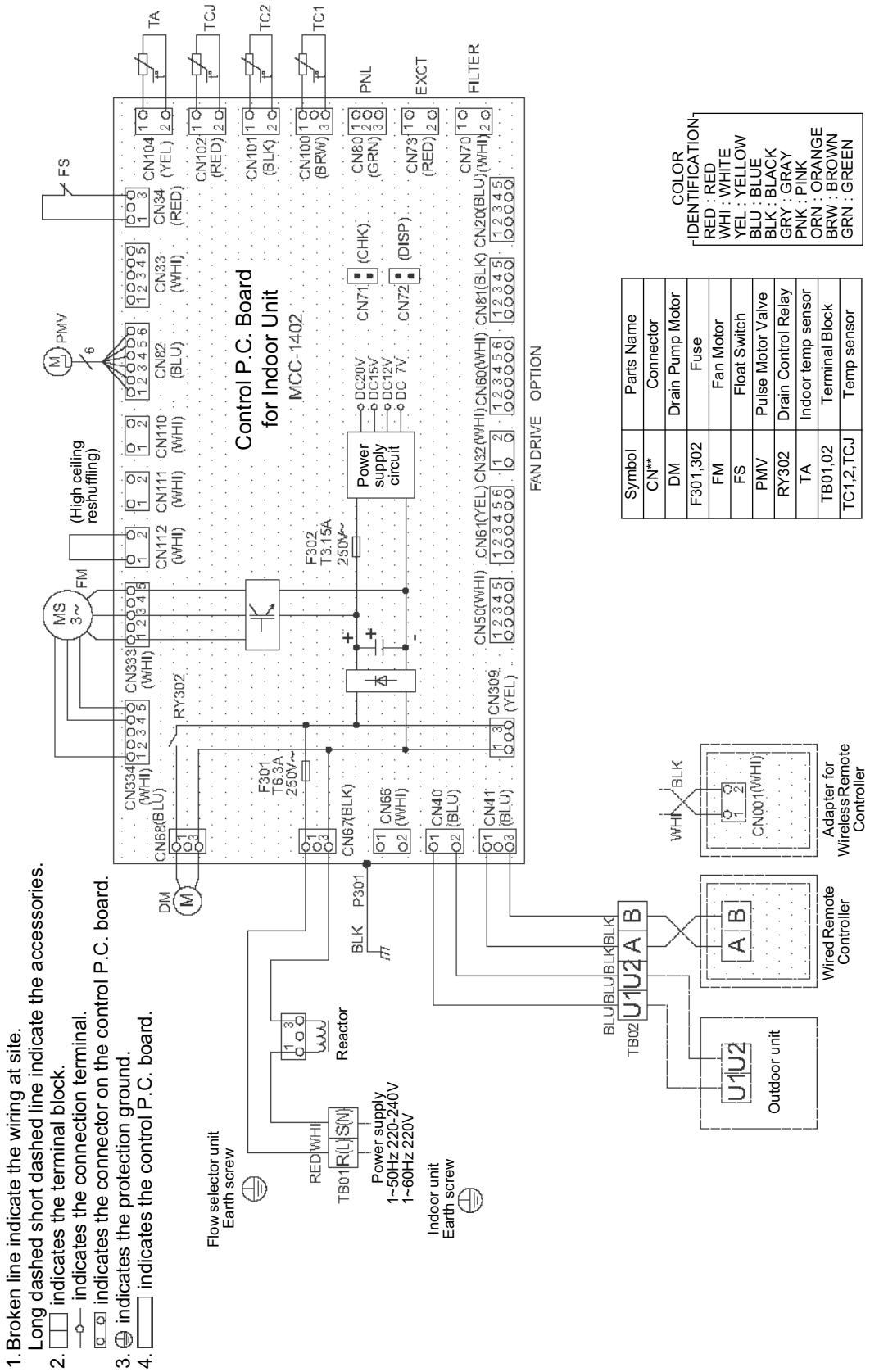

Symbol	Parts Name
CN**	Connector
DM	Drain Pump Motor
F301,302	Fuse
FM	Fan Motor
FS	Float Switch
PMV	Pulse Motor Valve
RY302	Drain Control Relay
TA	Indoor temp sensor
TB01,02	Terminal Block
TC1,2,TCJ	Temp sensor

1-5. Concealed duct high static pressure type

Models: MMD-AP0184H-E(TR), AP0244H-E(TR), AP0274H-E(TR), AP0364H-E(TR), AP0484H-E(TR)

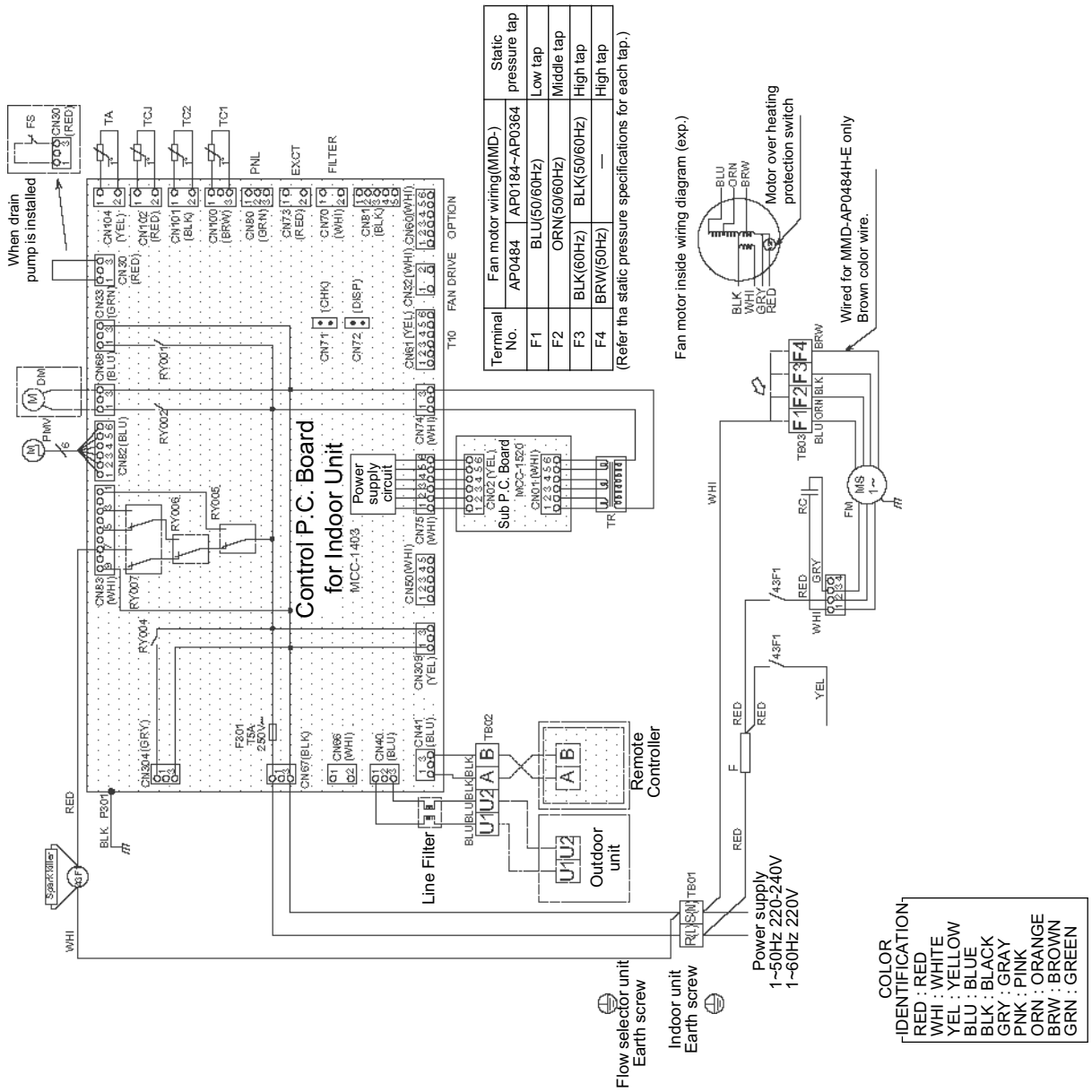

Terminal No.	Fan motor wiring(MMD-)		Static pressure tap
	AP0484	AP0184~AP0364	
F1	BLU(50/60Hz)		Low tap
F2	ORN(50/60Hz)		Middle tap
F3	BLK(60Hz)	BLK(50/60Hz)	High tap
F4	BRW(50Hz)	—	High tap

(Refer tha static pressure specifications for each tap.)

Symbol	Parts Name
43F1,F2	Fan motor Control Relay
CN**	Connector
F	Fuse
F301	Fuse
FM	Fan Motor
PMV	Pulse Motor Valve
RC	Running Capacitor
RY002	Drain Control Relay
RY005,006,007	Fan Motor Control Relay
TA	Indoor temp sensor
TB01,02,03	Terminal Block
TC1,2,TCJ	Temp sensor
TR	Transformer
Sold Separately	DM Drain Pump Motor
	FS Float Switch

1. Broken line indicate the wiring at site. Long dashed short dashed line indicate the accessories.
2. ☐ indicates the terminal block. —o— indicates the connection terminal. ⊡ indicates the connector on the control P.C. board.
3. ⏚ indicates the protection ground.
4. ▭ indicates the control P.C. board.
5. When installing the drain pump connect the froat switch connector to CN30 connector.
6. Ⓐ position is connected to terminal block when change to static pressure. Exchange the lead wire of arrow (⇨) position after check the terminal number as figure and lead wire's color of fan motor.
7. Be careful when modify the static pressure, the static pressure of high tap is different by 50Hz or 60Hz.

Models: MMD-AP0724H-E(TR), AP0964H-E(TR)

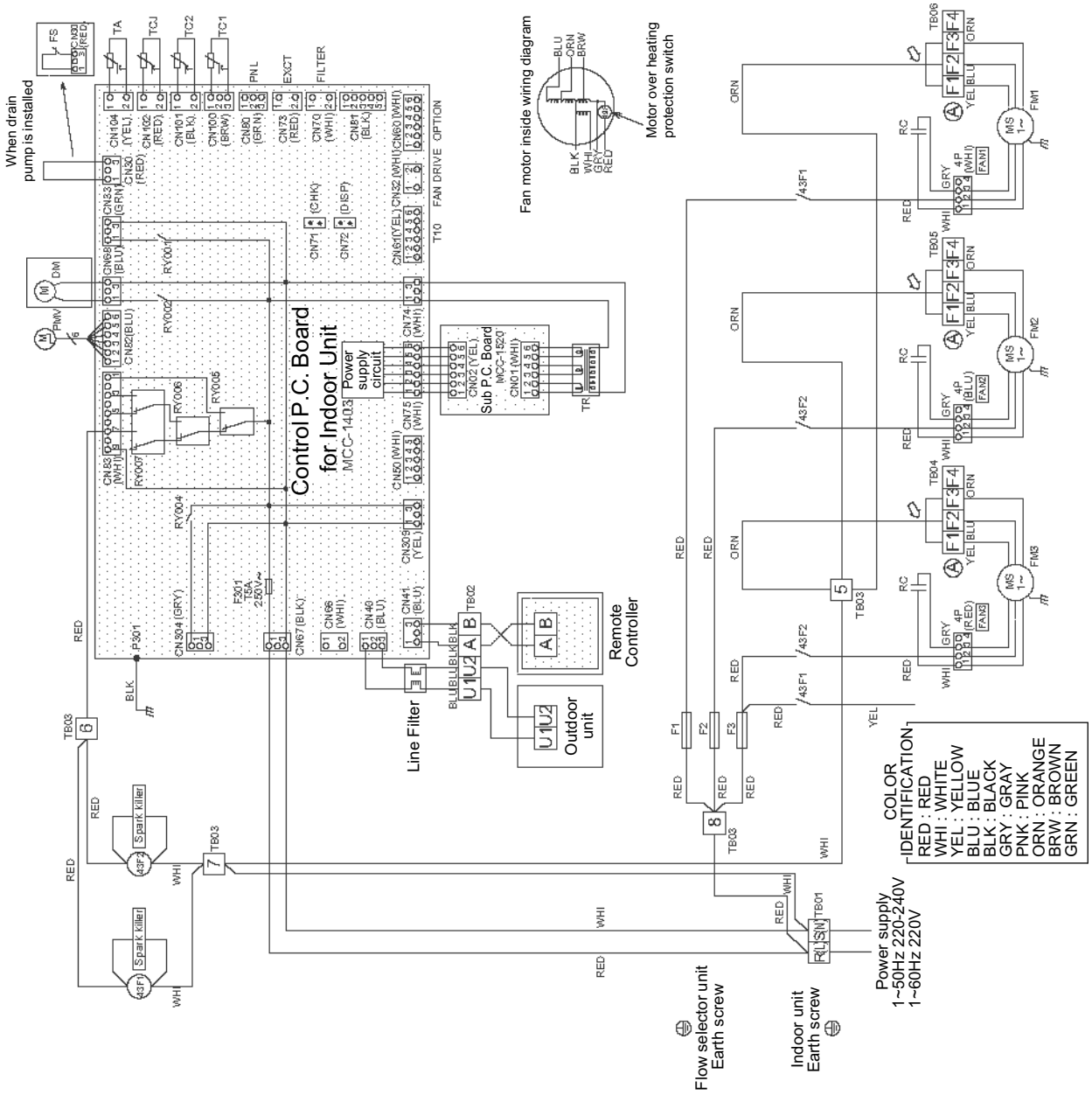

Symbol	Parts Name
43F1,F2	Fan motor Control Relay
CN**	Connector
F1,2,3	Fuse for Fan Motor
F301	Fuse
FM	Fan Motor
PMV	Pulse Motor Valve
RC	Running Capacitor
RY002	Drain Control Relay
RY005,006,007	Fan Motor Control Relay
TA	Indoor temp sensor
TB01,02,03, 04,05,06	Terminal Block
TC1,2,TCJ	Temp sensor
TR	Transformer
DM	Drain Pump Motor
FS	Float Switch

Sold Separately

1. Broken line indicate the wiring at site. Long dashed short dashed line indicate the accessories.
2. ☐ indicates the terminal block. —○— indicates the connection terminal. ▭ indicates the connector on the control P.C. board.
3. ⏚ indicates the protection ground.
4. ▭ indicates the control P.C. board.
5. When installing the drain pump connect the froat switch connector to CN30 connector.
6. Ⓐ position is connected to terminal block when change to static pressure. Exchange the lead wire of arrow (⇨) position after check the terminal number as figure and lead wire's color of fan motor.
7. Be careful when modify the static pressure, the static pressure of high tap is different by 50Hz or 60Hz.

Terminal No.	Fan motor wiring	Static pressure Pa (mmAq)	Note
F1	YEL	69(7)	
F2	BLU	137(14)	Setting from factory
F3	ORN	196(20)	

1-6. Slim duct type

Models: MMD-AP0054SPH-E(TR), AP0074SPH-E(TR), AP0094SPH-E(TR), AP0124SPH-E(TR), AP0154SPH-E(TR), AP0184SPH-E(TR)

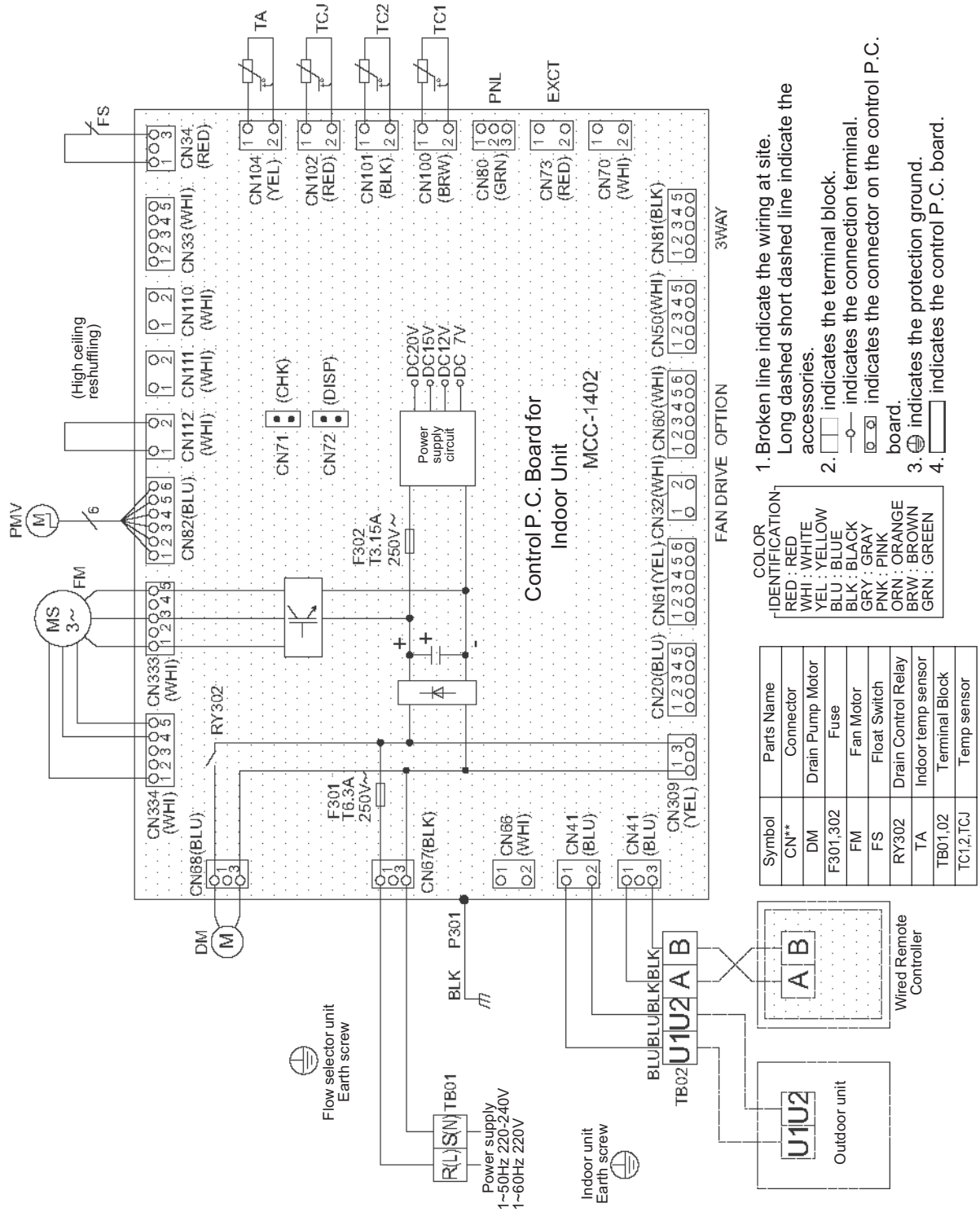

Symbol	Parts Name
CN**	Connector
DM	Drain Pump Motor
F301,302	Fuse
FM	Fan Motor
FS	Float Switch
RY302	Drain Control Relay
TA	Indoor temp sensor
TB01,02	Terminal Block
TC1,2,TCJ	Temp sensor

1-7. Ceiling type

Models: MMC-AP0154H-E(TR), AP0184H-E(TR), AP0244H-E(TR), AP0274H-E(TR), AP0364H-E(TR), AP0484H-E(TR)

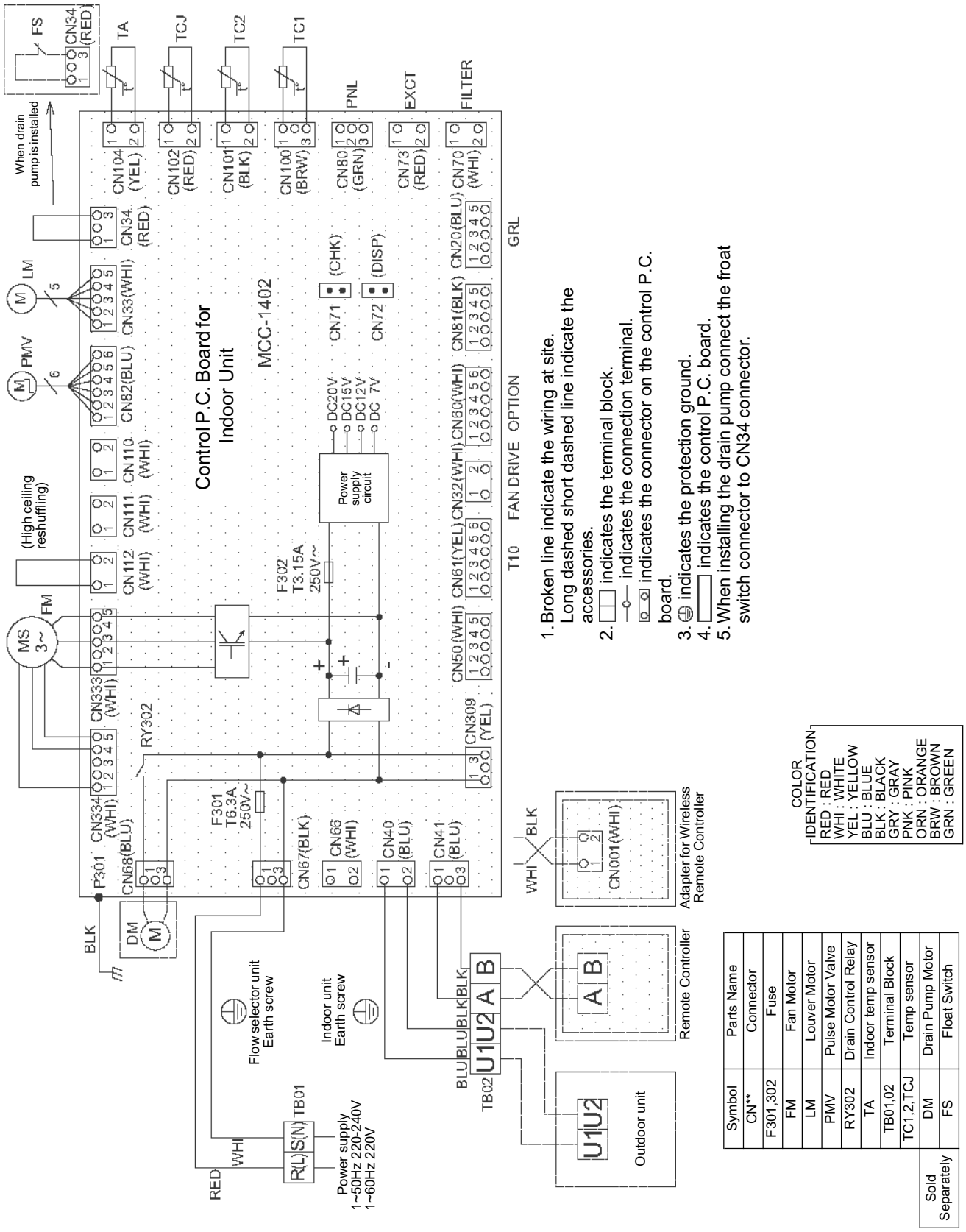

1-8. Floor standing cabinet type

Models: MML-AP0074H-E(TR), AP0094H-E(TR), AP0124H-E(TR), AP0154H-E(TR), AP0184H-E(TR), AP0244H-E(TR)

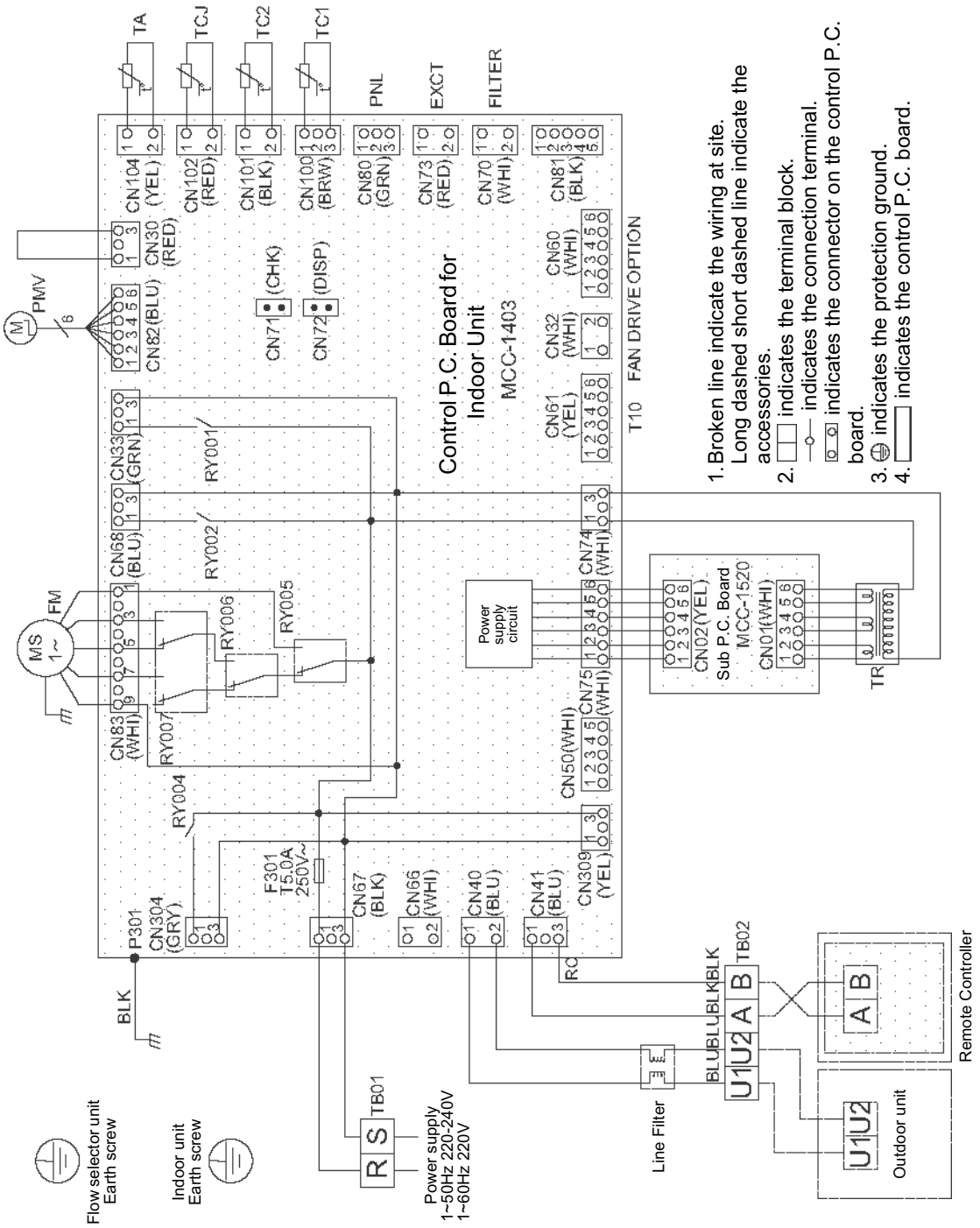

COLOR IDENTIFICATION
RED : RED
WHI : WHITE
YEL : YELLOW
BLU : BLUE
BLK : BLACK
GRY : GRAY
PNK : PINK
ORN : ORANGE
BRW : BROWN
GRN : GREEN

Symbol	Parts Name
CN**	Connector
F301	Fuse
FM	Fan Motor
PMV	Pulse Motor Valve
RC	Running Capacitor
RY005,006,007	Fan Motor Control Relay
TA	Indoor temp sensor
TB01,02	Terminal Block
TC1,2,TCJ	Temp sensor
TR	Transformer

1-9. Floor standing concealed type

Models: MML-AP0074BH-E(TR), AP0094BH-E(TR), AP0124BH-E(TR), AP0154BH-E(TR), AP0184BH-E(TR), AP0244BH-E(TR)

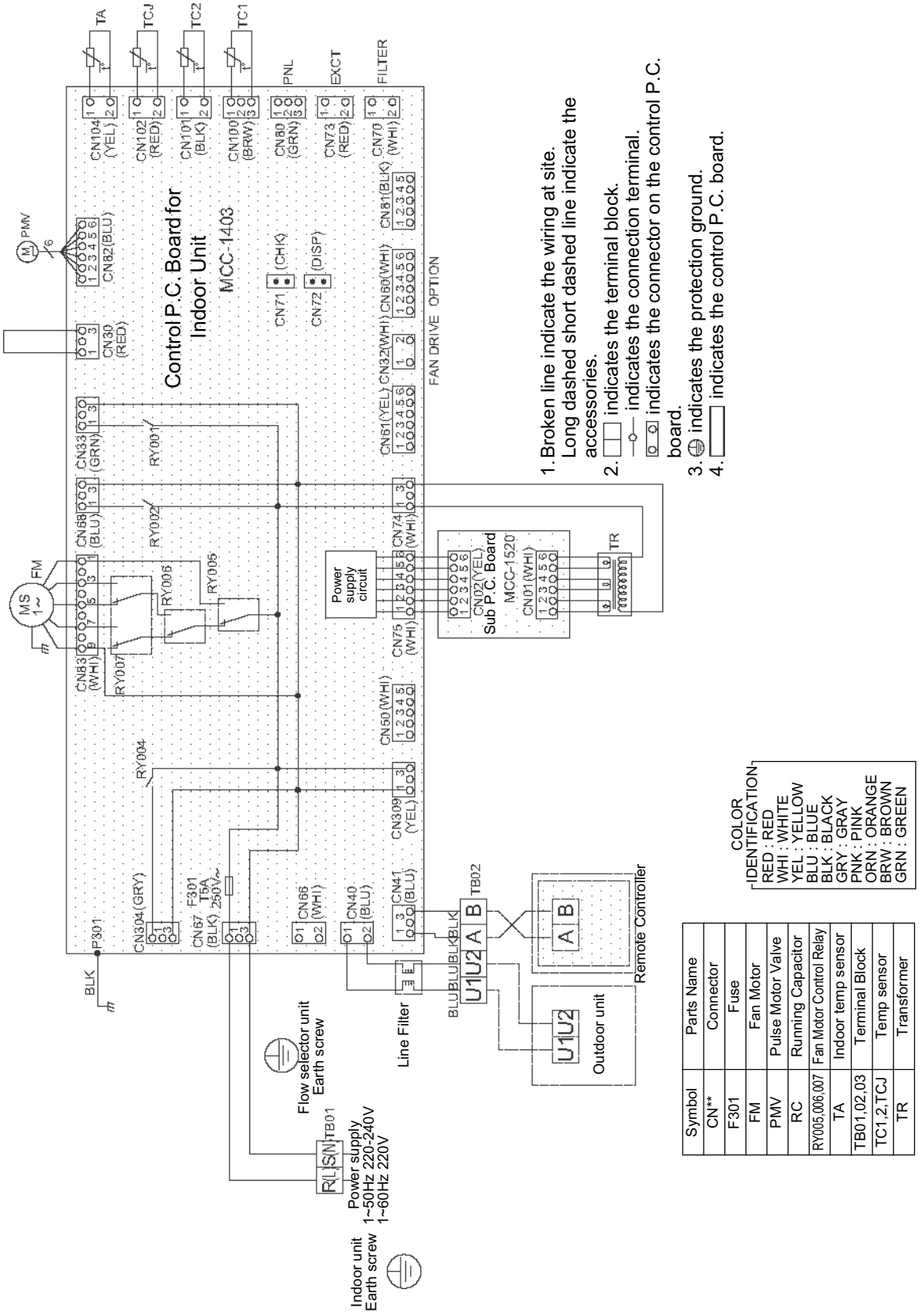

Symbol	Parts Name
CN**	Connector
F301	Fuse
FM	Fan Motor
PMV	Pulse Motor Valve
RC	Running Capacitor
RY005,006,007	Fan Motor Control Relay
TA	Indoor temp sensor
TB01,02,03	Terminal Block
TC1,2,TCJ	Temp sensor
TR	Transformer

1-10. Floor standing type

Models: MMF-AP0154H-E(TR), AP0184H-E(TR), AP0244H-E(TR), AP0274H-E(TR), AP0364H-E(TR), AP0484H-E(TR), AP0564H-E(TR)

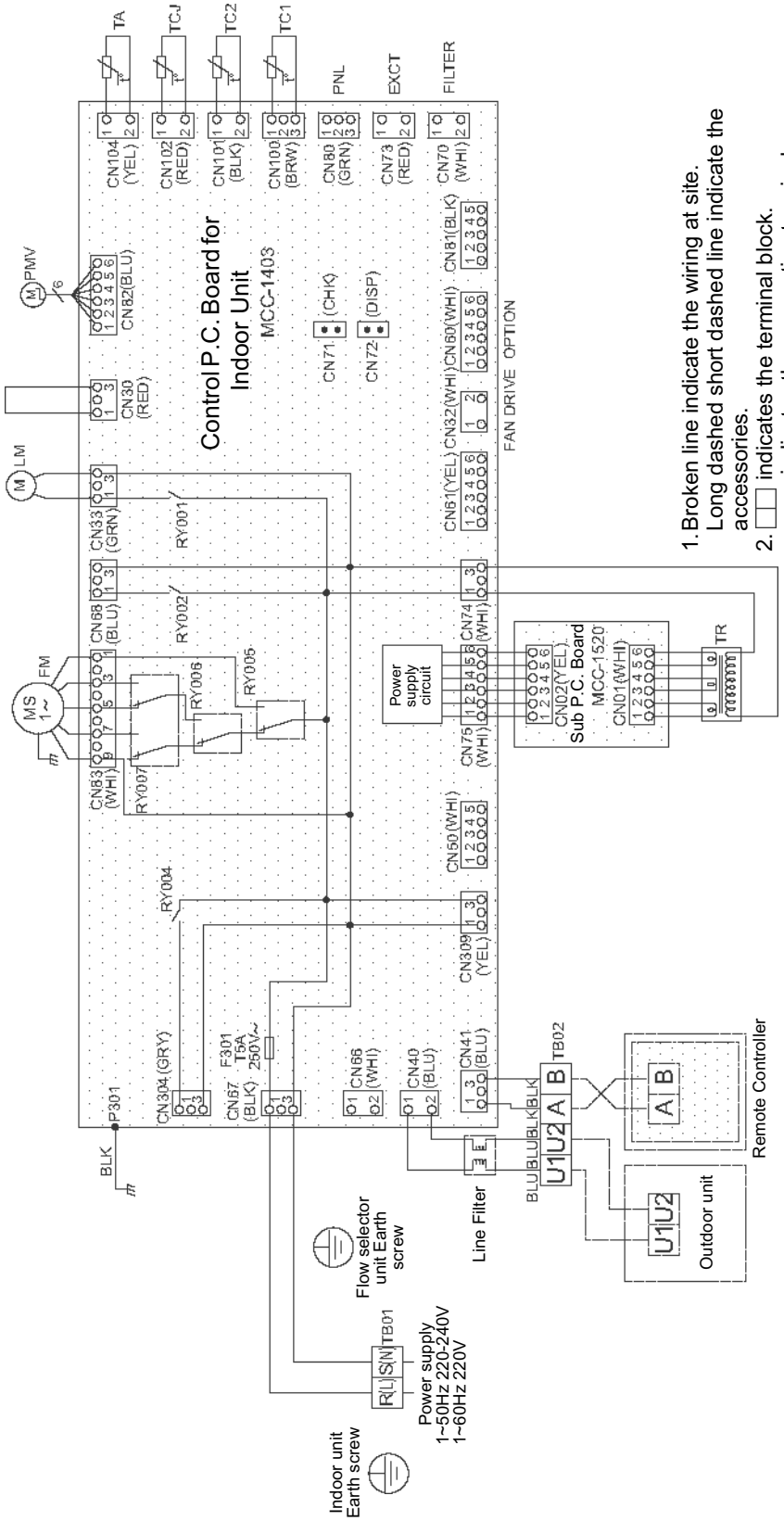

1. Broken line indicate the wiring at site. Long dashed short dashed line indicate the accessories.
2. ☐ indicates the terminal block. —o— indicates the connection terminal. ▭ indicates the connector on the control P.C. board.
3. ⏚ indicates the protection ground.
4. ▭ indicates the control P.C. board.

COLOR IDENTIFICATION
RED : RED
WHI : WHITE
YEL : YELLOW
BLU : BLUE
BLK : BLACK
GRY : GRAY
PNK : PINK
ORN : ORANGE
BRW : BROWN
GRN : GREEN

Symbol	Parts Name
CN**	Connector
LM	Louver Motor
F301	Fuse
FM	Fan Motor
PMV	Pulse Motor Valve
RC	Running Capacitor
RY001	Louver Control Relay
RY005,006,007	Fan Motor Control Relay
TA	Indoor temp sensor
TB01,02,03	Terminal Block
TC1,2,TCJ	Temp sensor
TR	Transformer

2 Parts Rating

2-1. Indoor unit

Compact 4-way cassette type

Model MMU-AP	0054MH	0074MH	0094MH	0124MH	0154MH	0184MH
Fan motor	SWF-230-60-1R					
Motor for horizontal grille	MP24Z3N					
Pulse motor	EDM-MD12TF-3					
Pulse motor valve	EDM-B25YGTF-3				EDM-B40YGTF-3	
TA sensor	Lead wire length: 155 mm Vinyl tube					
TC1 sensor	Ø4 size lead wire length: 1400 mm Vinyl tube					
TC2 sensor	Ø6 size lead wire length: 1500 mm Vinyl tube (Black)					
TCJ sensor	Ø6 size lead wire length: 1400 mm Vinyl tube (Red)					
Float switch	FS-0218-103					
Drain pump motor	ADP-1409					

1-way cassette type

Model MMU-AP	0074YH	0094YH	0124YH
Fan motor	AF-200-22-4N-1		
Running capacitor for fan motor	AC 400 V, 1 μF		
Drain pump motor	PJD-05230TF-1		
Float switch	FS-0208-602		
Control P.C. board transformer	TT-13		
Pulse motor	EDM-MD12TF-3		
Pulse motor valve	EDM-B25YGTF		
TA sensor	Lead wire length: 818 mm		
TC1 sensor	Ø4 size lead wire length: 1200 mm Vinyl tube (Blue)		
TCJ sensor	Ø6 size lead wire length: 1200 mm Vinyl tube (Red)		

Model MMU-AP	0154SH	0184SH	0244SH
Fan motor	SWF-280-60-1		
Driving motor for horizontal grille	MP24GA1		
Pulse motor	EDM-MD12TF-3		
Pulse motor valve	EDM-B40YGTF-3		
TA sensor	Lead wire length: 155 mm Vinyl tube		
TC1 sensor	Ø4 size lead wire length: 1100 mm Vinyl tube (Blue)		
TC2 sensor	Ø6 size lead wire length: 1100 mm Vinyl tube (Black)		
TCJ sensor	Ø6 size lead wire length: 1100 mm Vinyl tube (Red)		
Float switch	FS-0218-103		
Drain pump motor	ADP-1409		

Concealed duct standard type

Model MMD-AP	0074BH	0094BH	0124BH	0154BH	0184BH
Fan motor	ICF-280-120-2				
Drain pump motor	ADP-1409				
Float switch	FS-0218-102				
Pulse motor	EDM-MD12TF-3				
Pulse motor valve	EDM-B25YGTF			EDM-B40YGTF	
TA sensor	Lead wire length: 618 mm				
TC1 sensor	Ø4 size lead wire length: 1200 mm Vinyl tube (Blue)				
TC2 sensor	Ø6 size lead wire length: 1200 mm Vinyl tube (Black)				
TCJ sensor	Ø6 size lead wire length: 1200 mm Vinyl tube (Red)				

Model MMD-AP	0244BH	0274BH	0304BH	0364BH	0484BH	0564BH
Fan motor	ICF-280-120-1			ICF-280-120-2		
Drain pump motor	ADP-1409					
Float switch	FS-0218-102					
Pulse motor	EDM-MD12TF-3					
Pulse motor valve	EDM-B40YGTF			EDM-B60YGTF-1		
TA sensor	Lead wire length: 618 mm					
TC1 sensor	Ø4 size lead wire length: 1200 mm Vinyl tube (Blue)					
TC2 sensor	Ø6 size lead wire length: 1200 mm Vinyl tube (Black)					
TCJ sensor	Ø6 size lead wire length: 1200 mm Vinyl tube (Red)					

Concealed duct high static pressure type

Model MMD-AP	0184H	0244H	0274H	0364H	0484H
Fan motor	STF-200-160-4B	STF-200-160-4A		STF-200-260-4C	STF-200-260-4B
Running condenser for fan motor	AC 500 V, 4 μF	AC 400 V, 8 μF		AC 450 V, 6 μF	AC 400 V, 8 μF
Drain pump motor	ADP-1409				
Float switch	FS-0218-102-6				
Pulse motor	EDM-MD12TF-3				
Pulse motor valve	EDM-B40YGTF			EDM-B60YGTF-1	
TA sensor	Lead wire length: 1200 mm				
TC1 sensor	Ø4 size lead wire length: 1200 mm Vinyl tube (Blue)				
TC2 sensor	Ø6 size lead wire length: 1200 mm Vinyl tube (Black)				
TCJ sensor	Ø6 size lead wire length: 1200 mm Vinyl tube (Red)				

Model MMD-AP	0724H	0964H
Fan motor	STF-200-370-4A	
Running condenser for fan motor	AC 450 V, 12 μF	
Drain pump motor	ADP-1409	
Float switch	FS-0218-102-6	
Pulse motor	EDM-MD12TF-3	
Pulse motor valve	EDM-BAOYGTF-1	
TA sensor	Lead wire length: 818 mm	
TC1 sensor	Ø4 size lead wire length: 2000 mm Vinyl tube (Blue)	
TC2 sensor	Ø6 size lead wire length: 2000 mm Vinyl tube (Black)	
TCJ sensor	Ø6 size lead wire length: 2000 mm Vinyl tube (Red)	

Slim duct type

Model MMD-AP	0054SPH	0074SPH	0094SPH	0124SPH	0154SPH	0184SPH
Fan motor	SWF-280-60-1					
Pulse motor	EDM-MD12TF-3					
Pulse motor valve	EDM-B25YGTF				EDM-B40YGTF	
Drain pump motor	ADP-1409					
Float switch	FS-0218-102					
TA sensor	Lead wire length: 1558 mm Vinyl tube					
TC1 sensor	Ø4 size lead wire length: 1200 mm Vinyl tube (Blue)					
TC2 sensor	Ø6 size lead wire length: 1200 mm Vinyl tube (Black)					
TCJ sensor	Ø6 size lead wire length: 1200 mm Vinyl tube (Red)					

Ceiling type

Model MMC-AP	0154H	0184H	0244H	0274H	0364H	0484H
Fan motor	SWF-280-60-1		SWF-280-60-2		SWF-280-120-2	
Driving motor for horizontal grille	MP24GA1					
Pulse motor	EDM-MD12TF-3					
Pulse motor valve	EDM-B40YGTF			EDM-B60YGTF-1		
TA sensor	Lead wire length: 155 mm Vinyl tube					
TC1 sensor	Ø4 size lead wire length: 1200 mm Vinyl tube (Blue)					
TC2 sensor	Ø6 size lead wire length: 1200 mm Vinyl tube (Black)					
TCJ sensor	Ø6 size lead wire length: 1200 mm Vinyl tube (Red)					

Floor standing cabinet type

Model MML-AP	0074H	0094H	0124H	0154H	0184H	0244H
Fan motor	AF-200-19-4F		AF-200-45-4F		AF200-70-4K	
Running condenser for fan motor	AC450 V, 1.2 μF		AC400 V, 1.8 μF		AC450 V, 2 μF	
Transformer	TT13					
Pulse motor	EDM-MD12TF-3					
Pulse motor valve	EDM-B25YGTF		EDM-B40YGTF			
TA sensor	Lead wire length: 818 mm Vinyl tube					
TC1 sensor	Ø4 size lead wire length: 1200 mm Vinyl tube (Blue)					
TC2 sensor	Ø6 size lead wire length: 1200 mm Vinyl tube (Black)					
TCJ sensor	Ø6 size lead wire length: 1200 mm Vinyl tube (Red)					

Floor standing concealed type

Model MML-AP	0074BH	0094BH	0124BH	0154BH	0184BH	0244BH
Fan motor	AF-200-19-4G			AF-200-70-4K		
Running condenser for fan motor	AC450 V, 1.5 μF			AC450 V, 1 μF		AC450 V, 2 μF
Transformer	TT-13					
Pulse motor	EDM-MD12TF-3					
Pulse motor valve	EDM-B25YGTF			EDM-B40YGTF		
TA sensor	Lead wire length: 818 mm Vinyl tube					
TC1 sensor	Ø4 size lead wire length: 2000 mm Vinyl tube (Blue)					
TC2 sensor	Ø6 size lead wire length: 2000 mm Vinyl tube (Black)					
TCJ sensor	Ø6 size lead wire length: 2000 mm Vinyl tube (Red)					

Floor standing type

Model MMF-AP	0154H	0184H	0244H	0274H	0364H	0484H	0564H
Fan motor	AF-200-37R		AF-200-63T		AF-200-110M-1	AF-200-160H-1	
Running condenser for fan motor	AC500 V, 3 μF		AC500 V, 3.5 μF		AC500 V, 4 μF		
Transformer	TT-13						
Pulse motor	EDM-MD12TF-3						
Pulse motor valve	EDM-B40YGTF				EDM-B60YGTF-1		
Driving motor for vertical louver	MT8-3-9						
TA sensor	Lead wire length: 1200 mm Vinyl tube						
TC1 sensor	Ø4 size lead wire length: 1200 mm Vinyl tube (Blue)						
TC2 sensor	Ø6 size lead wire length: 2000 mm Vinyl tube (Black)						
TCJ sensor	Ø6 size lead wire length: 1200 mm Vinyl tube (Red)						

3 Refrigerant Cycle Diagram

Indoor unit

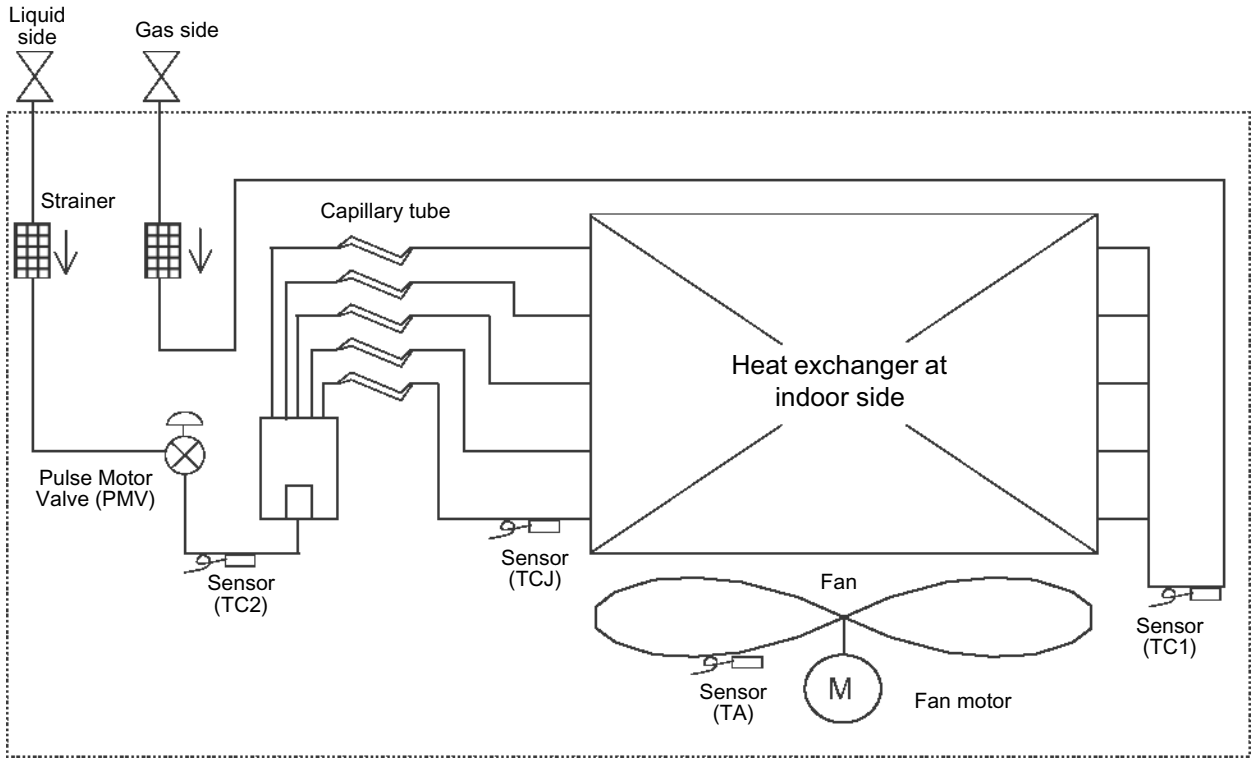

CAUTION

MMU-AP0074YH, AP0094YH, AP0124YH type air conditioners have no TC2 sensor.

Explanation of functional parts in indoor unit

Functional part name		Functional outline
Pulse Motor Valve	PMV	(Connector CN082 (6P): Blue) 1) Controls super heat in cooling operation 2) Controls under cool in heating operation 3) Recovers refrigerant oil in cooling operation 4) Recovers refrigerant oil in heating operation
Temp. Sensor	1.TA	(Connector CN104 (2P): Yellow) 1) Detects indoor suction temperature
	2.TC1	(Connector CN100 (3P): Brown) 1) Controls PMV super heat in cooling operation
	3.TC2	(Connector CN101 (2P): Black) 1) Controls PMV under cool in heating operation
	4.TCJ	(Connector CN102 (2P): Red) 1) Controls PMV super heat in cooling operation 2) [MMU-AP0074YH to AP0124YH only] Controls PMV under cool in heating operation

4 Control Outline

■ Indoor unit

Control specifications

<table>
<tr><th>NO.</th><th>Item</th><th>Specification outline</th><th>Remarks</th></tr>
<tr><td>1</td><td>Upon power supply reset</td><td>1. Identification of outdoor unit
When the power supply is reset, the outdoor unit is identified, and control is redirected according to the identification result.
2. Indoor fan speed and air flow direction control availability settings
Settings such as indoor fan speed and air flow direction control availability are replaced on the basis of EEPROM data.
3. If power supply reset is performed in the wake of a fault, the check code is cleared. If the abnormality persists after the Start / Stop button on the remote controller is pressed to resume operation, the check code is redisplayed on the remote controller.</td><td></td></tr>
<tr><td>2</td><td>Operation selection</td><td>1. The operation mode changes in response to an operation selection command issued via the remote controller.
<table>
<tr><th>Remote controller command</th><th>Control outline</th></tr>
<tr><td>STOP</td><td>Air conditioner shutdown</td></tr>
<tr><td>FAN</td><td>Fan operation</td></tr>
<tr><td>COOL</td><td>Cooling operation</td></tr>
<tr><td>DRY</td><td>Drying operation</td></tr>
<tr><td>HEAT</td><td>Heating operation</td></tr>
</table></td><td>Ts: Temperature setting
Ta: Room temperature</td></tr>
<tr><td>3</td><td>Room temp. control</td><td>1. Adjustment range - remote controller temperature setting (°C)
<table>
<tr><th></th><th>COOL / DRY</th><th>HEAT</th></tr>
<tr><td>Wired type</td><td>18~29</td><td>18~29</td></tr>
<tr><td>Wireless type</td><td>18~30</td><td>16~30</td></tr>
</table>
2. In heating operation, the temperature setting may be fine-tuned via the DN code “06”.
<table>
<tr><td>SET DATA</td><td>0</td><td>2</td><td>4</td><td>6</td></tr>
<tr><td>Temperature setting adjustment</td><td>+0 °C</td><td>+2 °C</td><td>+4 °C</td><td>+6 °C</td></tr>
</table>
Factory default
<table>
<tr><th>Model type</th><th>SET DATA</th></tr>
<tr><td>Floor standing (standard, concealed, cabinet)</td><td>0</td></tr>
<tr><td>Other model</td><td>2</td></tr>
</table></td><td>Shift in heating suction temperature
(not applicable to remote controller thermo operation)</td></tr>
<tr><td>4</td><td>Automatic capacity control</td><td>1. The outdoor unit determines the operational capacities of indoor units according to the difference between Ta and Ts.
 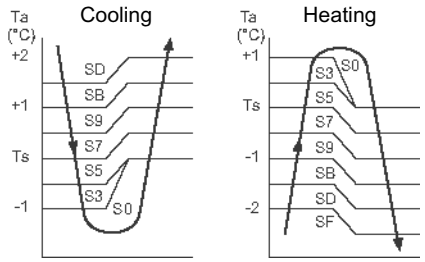
</td><td>Ts: Temperature setting
Ta: Room temperature</td></tr>
</table>

NO.	Item	Specification outline	Remarks
5	Fan speed control	1. The fan operates in one of the four speed modes of “HIGH (HH)”, “MED (H)”, “LOW (L)” and “AUTO” on the basis of a command issued via the remote controller. (Concealed duct high static pressure type: HH only) 2. In AUTO fan speed mode, the air speed changes according to the difference between Ta and Ts. **<Cooling>** 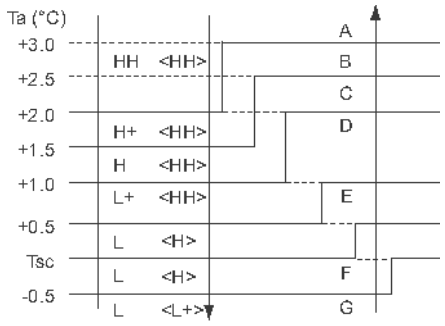 	HH > H+ > H > L+ > L > UL or LL
		• Control is identical in remote controller thermo and body thermo operation. Speed modes shown in < > apply to cooling operation under AUTO air conditioner operation mode. • In AUTO fan speed mode, the fan speed remains the same for 3 minutes each time a speed change occurs. However, a speed change command issued via the remote controller can override this, and the fan speed changes accordingly. • At the beginning of cooling operation, a higher speed (steeper downward temperature gradient) is chosen. • As long as the temperature difference remains on a boundary line, the fan speed stays the same.	DN code “32” “0000”: Body thermo “0001”: Remote controller thermo
		<Heating> 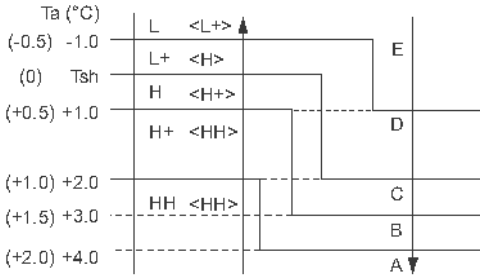 Figures inside ( ) applies to remote controller thermo operation. Figures outside ( ) applies to body thermo operation. Speed modes shown in < > apply to heating operation under AUTO air conditioner operation mode.	
		• In AUTO fan speed mode, the fan speed remains the same for 1 minute each time a speed change occurs. However, a speed change command issued via the remote controller can override this, and the fan speed changes accordingly. • At the beginning of heating operation, a higher speed (steeper upward temperature gradient) is chosen. • As long as the temperature difference remains on a boundary line, the fan speed stays the same. • When TC2 ≧ 60 °C, the fan speed is raised by one step.	TC2: Indoor heat exchanger sensor temperature
		3. If the air conditioner goes thermo OFF during heating operation, the fan speed drops down to LL (breeze).	“HEATING STANDBY” displayed

NO.	Item	Specification outline	Remarks
6	Cold air discharge prevention control	1. In heating operation, the upper limit of the fan tap is set according to the lower of whichever is the higher between TC2 sensor and TCJ sensor temperatures, on the one hand, and TC1 sensor temperature, on the other. • If the fan continuously operates in zone B for 6 minutes, it automatically moves into zone C. • During defrosting, the control point is shifted by +6 °C. 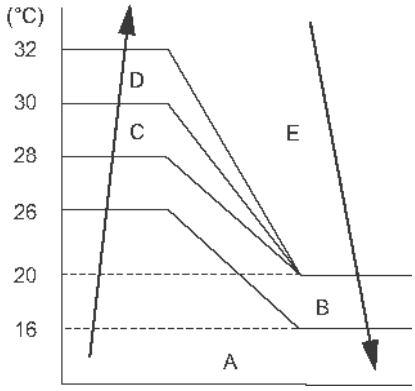 Zone A:OFF Zone B:26 °C or above and below 28 °C Breeze Zone C:28 °C or above and below 30 °C Low Zone D:30 °C or above and below 32 °C Medium Zone E:High	TCJ: Indoor heat exchanger sensor temperature • In zones D and E, priority is given to the remote controller fan speed setting. • In zone A, "HEATING STANDBY" is displayed.
7	Freeze prevention control (low temp. release)	1. During cooling, the air conditioner is operated in the manner described below according to the temperature readings of the TC1, TC2 and TCJ sensors. • If zone J operation is detected for 5 minutes, the air conditioner is forced into thermo OFF. • In zone K, the timer is put on pause, with the current timer count retained. • If zone I operation is detected, the timer count is cleared, and the air conditioner returns to normal operation. • If continuous zone J operation forces the air conditioner into thermo OFF, the indoor fan is operated in breeze mode until it moves into zone I. The control is terminated under the following conditions: Termination conditions 1) TC1 ≧ 12 °C, TC2 ≧ 12 °C, and TCJ ≧ 12 °C 2) Passage of 20 minutes after stoppage 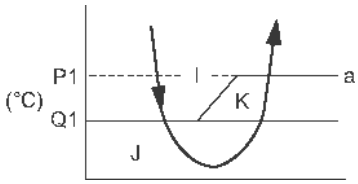 | TC1 | TC2, TCJ | |---|---|---| | P1 | 10 °C (5 °C) | -10 °C | | Q1 | 0 °C | -14 °C | Temperature in ( ): If the temperature is below this value when the power is turned on, the air conditioner is forced into thermo OFF. 2. During cooling, the air conditioner is operated in the manner described below according to the temperature readings of the TC2 and TCJ sensors. • If zone M operation is detected for 45 minutes, the air conditioner is forced into thermo OFF. • In zone N, the timer is put on pause, with the current timer count retained. • When the air conditioner goes back into zone M, timer count is resumed from the retained value. • If zone L operation is detected, the timer count is cleared, and the air conditioner returns to normal operation. 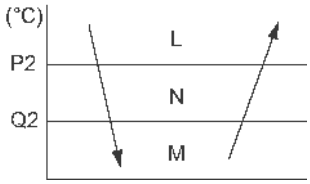 | TC2, TCJ | |---|---| | P2 | 5 | | Q2 | -2.0 | Reset conditions 1) TC1 ≧ 12 °C, TC2 ≧ 12 °C and TCJ ≧ 12 °C 2) Passage of 20 minutes after stoppage	TC1: Indoor heat exchanger sensor temperature * With models without TC2, TC2 is not part of the control parameters.

NO.	Item	Specification outline	Remarks
8	Cooling oil (refrigerant) recovery control	While the outdoor unit is recovering cooling oil (refrigerant), the indoor units perform the following control tasks: [common for operational (cooling thermo ON / thermo OFF / FAN), as well as non-operational indoor units] 1) Open the indoor PMV to a certain degree. 2) Engage in recovery control for a specified period of time and return to normal cooling operation at the end of this period upon terminating the control. 3) Operate the drain pump throughout the recovery control period and for about 1 minute after it.	• Recovery operation normally takes place roughly every 2 hours. • The opening position of the indoor PMV depending on the type and capacity of the indoor unit.
9	Heating refrigerant (oil) recovery control	While the outdoor unit is recovering heating refrigerant (oil), the indoor units perform the following control tasks: 1) Open the indoor PMV to a certain degree. 2) Control the indoor fan according to the operation mode. [Indoor units operating in heating thermo ON / OFF state] Let the indoor fan continue operating, but turn it off if the temperature of the indoor heat exchanger drops. [Indoor units operating in FAN mode] Turn off the indoor fan and display “HEATING STANDBY” on the remote controller. [Non-operational indoor units] Keep the indoor fan turned off. 3) Terminate the recovery operation depending on the TC2 temperature reading. The timing of termination is determined by each indoor unit. 4) Operate the indoor fan and drain pump for about 1 minute after the termination of the recovery operation. (Applicable to compact 4-way cassette type and 1-way cassette type)	• Recovery operation normally takes place roughly every hour. • The opening position of the indoor PMV depending on the type and capacity of the indoor unit.
10	Defrosting control	While the outdoor unit is engaged in defrosting control, the indoor units perform the following control tasks: 1) Open the indoor PMV to a certain degree. 2) Control the indoor fan according to the operation mode. [Indoor units operating in heating thermo ON / OFF state] Let the indoor fan continue operating for a while, but turn it off as the temperature of the indoor heat exchanger drops. [Indoor units operating in FAN mode] Let the indoor fan continue operating. [Non-operational indoor units] Keep the indoor fan turned off. 3) As defrosting control comes to an end, it gives way to heating refrigerant (oil) recovery control. (For control details, see “9. Heating refrigerant (oil) recovery control” above.)	• For defrosting commencement conditions, see 5 Control Outline “7. Defrosting control (reverse defrosting method)” in SMMS-i Outdoor Unit Service Manual A10-005 above. • The opening position of the indoor PMV depending on the type and capacity of the indoor unit.
11	Short intermittent operation compensation control	1. For 5 minutes after startup, the system is forced to continue operating even if it reaches the thermo OFF region. 2. However, priority is given to cooling / heating selection, operation standby, and protective control, so that there is no overriding of thermo OFF in these cases.	
12	Drain pump control	1. During cooling (including DRY operation), the drain pump is operated at all times. 2. If the float switch is activated while the drain pump is in operation, the drain pump continues operating, with the relevant check code displayed. 3. If the float switch is activated while the drain pump is turned off, thermo OFF is forced on the air conditioner, with the drain pump put into operation. If the float switch continues to be activated for about 5 minutes, the drain pump is turned off, with the relevant check code displayed.	Check code [P10]
13	Elimination of residual heat	1. When the air conditioner is turned off after engaging in heating operation, the indoor fan is operated for about 30 seconds in “breeze” mode.	

<table>
<tr><th>NO.</th><th>Item</th><th>Specification outline</th><th>Remarks</th></tr>
<tr><td>14</td><td>Filter sign display
(not applicable to wireless type)
* Provided in the separately mounted type, TCB-AX21E.</td><td>1. The indoor fan's cumulative hours of operation are counted, and when these exceed the prescribed value (150H / 2500H), a filter replacement signal is sent to the remote controller to display a filter sign on it.
2. When a filter reset signal is received from the remote controller, the timer measuring cumulative hours is cleared. If the prescribed hours have been exceeded, the hours count is reset, with the sign on the remote controller display erased.
<table>
<tr><th>Filter service life</th><th>2500H</th><th>150H</th></tr>
<tr><td>Type</td><td>4-way cassette type
1-way cassette type
(SH, YH)
2-way cassette type
Ceiling type
Concealed duct standard type
Concealed duct high static pressure type
Slim duct type</td><td>High wall type
Floor standing type
Floor standing concealed type
Floor standing cabinet type</td></tr>
</table></td><td>"FILTER" displayed</td></tr>
<tr><td>15</td><td>Operation standby
Heating standby</td><td><Operation standby> ..... Displayed on remote controller
1. When any of the DN codes listed below is displayed
• "P05" - Detection of an open phase in the power supply wiring
• "P10" - Detection of indoor flooding in at least one indoor unit
• "L30" - Detection of an interlock alarm in at least one indoor unit
2. Forced thermo OFF
• "COOL / DRY" operation is unavailable because at least one indoor unit is operating in "HEAT" mode.
• "HEAT" operation is unavailable because at least one indoor unit is operating in "COOL / DRY" mode under priority cooling setting (bit 1 of SW11 on outdoor I/F P.C. board ON).
3. All indoor units not able to engage in any of the above operations stand by in thermo OFF state.
4. The indoor fan has been turned off because the system is engaged in a heat refrigerant (oil) recovery operation.
<Heating standby> ..... Displayed on remote controller
1. Normal thermo OFF
• During heating, the indoor unit goes thermo OFF as the heating temperature setting is reached.
2. During heating, the fan rotates at a breeze speed (UL or lower) or remains stationary to prevent cold air from being discharged (including defrosting operation).
3. Forced thermo OFF
• "HEAT" operation is unavailable because at least one indoor unit is operating in "COOL / DRY" mode under priority cooling setting (bit 1 of SW11 on outdoor I/F P.C. board ON).</td><td>• "OPERATION STANDBY" displayed

No display provided on wireless remote controller

• "HEATING STANDBY" displayed</td></tr>
</table>

<table>
<tr><th>NO.</th><th>Item</th><th>Specification outline</th><th>Remarks</th></tr>
<tr><td>16</td><td>Selection of central control mode</td><td>1. The range of operations that can be performed via an indoor unit remote controller can be determined through the setting of the central controller.
2. Setting details
TCC-Link central control
<table>
<tr><th rowspan="2">Operation via TCC-Link central control</th><th colspan="6">Operation via RBC-AMT32E</th><th rowspan="2">RBC-AMT32E display</th></tr>
<tr><th>Start / stop selection</th><th>Operation mode selection</th><th>Timer setting</th><th>Temperature setting</th><th>Fan speed setting</th><th>Air flow direction setting</th></tr>
<tr><td>Individual</td><td>O</td><td>O</td><td>O</td><td>O</td><td>O</td><td>O</td><td rowspan="5">“CENTRAL CONTROL IN PROGRESS”</td></tr>
<tr><td>Central 1</td><td>×</td><td>O</td><td>×</td><td>O</td><td>O</td><td>O</td></tr>
<tr><td>Central 2</td><td>×</td><td>×</td><td>×</td><td>×</td><td>O</td><td>O</td></tr>
<tr><td>Central 3</td><td>O</td><td>×</td><td>O</td><td>×</td><td>O</td><td>O</td></tr>
<tr><td>Central 4</td><td>O</td><td>×</td><td>O</td><td>O</td><td>O</td><td>O</td></tr>
</table>
(O: Accessible ×: Inaccessible)</td><td>• In the case of a wired remote controller, “CENTRAL CONTROL IN PROGRESS” is displayed (lit up) while in central control mode.
• The display blinks when a control function inaccessible to a remote controller is chosen.
• A wireless remote controller has the same set of control functions, although there is no display. When a control operation is performed via a wireless remote controller while in central control mode, a peep sound alert (5 times) is provided.</td></tr>
<tr><td>17</td><td>Louver control</td><td>1. Louver position setting
• When the louver position is changed, the louver turns all the way down before settling in the set position.
• Louver position is adjustable in the range shown in the diagrams below.
During cooling / drying

During heating / fan-only operation

• During group operation, position setting can be performed individually or collectively.
2. Swing setting
• The “SWING” sign is displayed, along with alternating images as shown below.
In all operation modes
 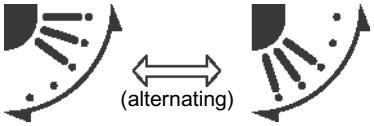

• During group operation, swing setting can be performed individually or collectively.
3. Set louver positions
<table>
<tr><th></th><th>4-way</th><th>1-way (SH)</th><th>Ceiling</th></tr>
<tr><td>Normal stop</td><td>Downward</td><td>Closed</td><td>Horizontal</td></tr>
<tr><td>Abnormal stop</td><td>Downward</td><td>No change</td><td>Horizontal</td></tr>
<tr><td>Heating standby</td><td>Upward</td><td>Upward</td><td>Horizontal</td></tr>
<tr><td>Oil / refrigerant recovery</td><td>Upward</td><td>Upward</td><td>Horizontal</td></tr>
</table></td><td></td></tr>
<tr><td>18</td><td>DC motor</td><td>1. When the fan is turned on, the positions of the stator and rotor are determined. (The motor turns in incremental steps.)
2. The fan operates in accordance with commands issued by the indoor controller.
Note:
If the fan is rotating while the air conditioner is turned off due to an inflow of outside air or some other reason, the indoor unit may operate without turning on the fan motor.
Note:
If fan motor lock is detected, the indoor unit is turned off, with an error display provided.</td><td>Check code “P12”</td></tr>
</table>

NO.	Item	Specification outline	Remarks
19	Power saving mode	1. Push the SAVE button on the remote controller 2. The "" segment lights up on the wired remote controller display. 3. The requirement capacity ratio is limited to approximately 75 %. 4. If the power saving operation is enabled, the settings are retained when the operation is stopped, when the mode is changed, or when the power is reset. The power saving operation will be enabled the next time the operation starts.	The power saving operation cannot be set by the wireless remote controller or wired remote controller of AMT31E or older.

5 Applied Control and Functions (Including Circuit Configuration)

5-1. Indoor controller block diagram

5-1-1. When main (sub) remote controller connected

<Compact 4-way cassette type, 1-way cassette (SH) type, ceiling type, concealed duct standard type, slim duct type>

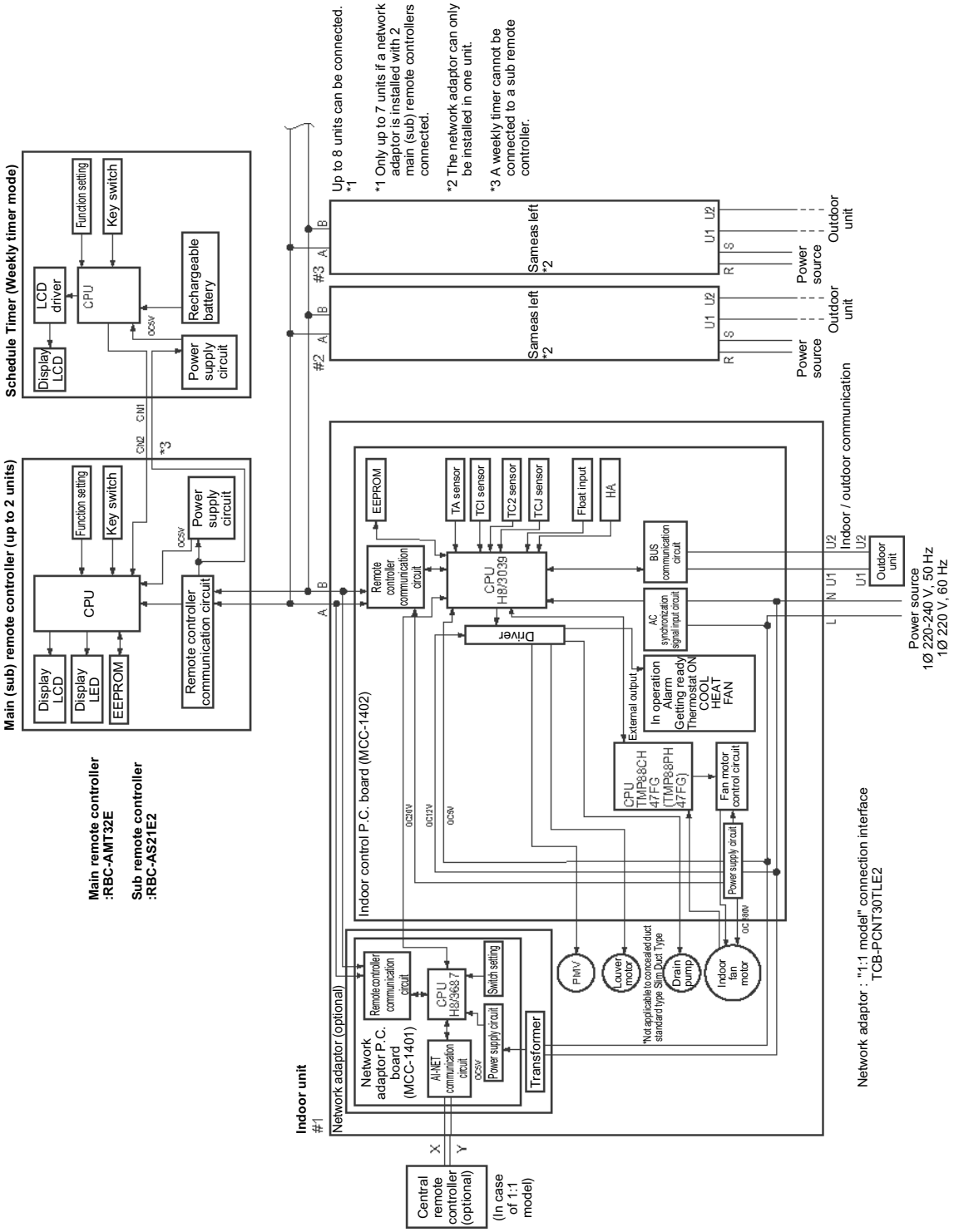

<1-way cassette (YH) type, floor standing type, concealed duct high static pressure type, floor standing concealed type, floor standing cabinet type>

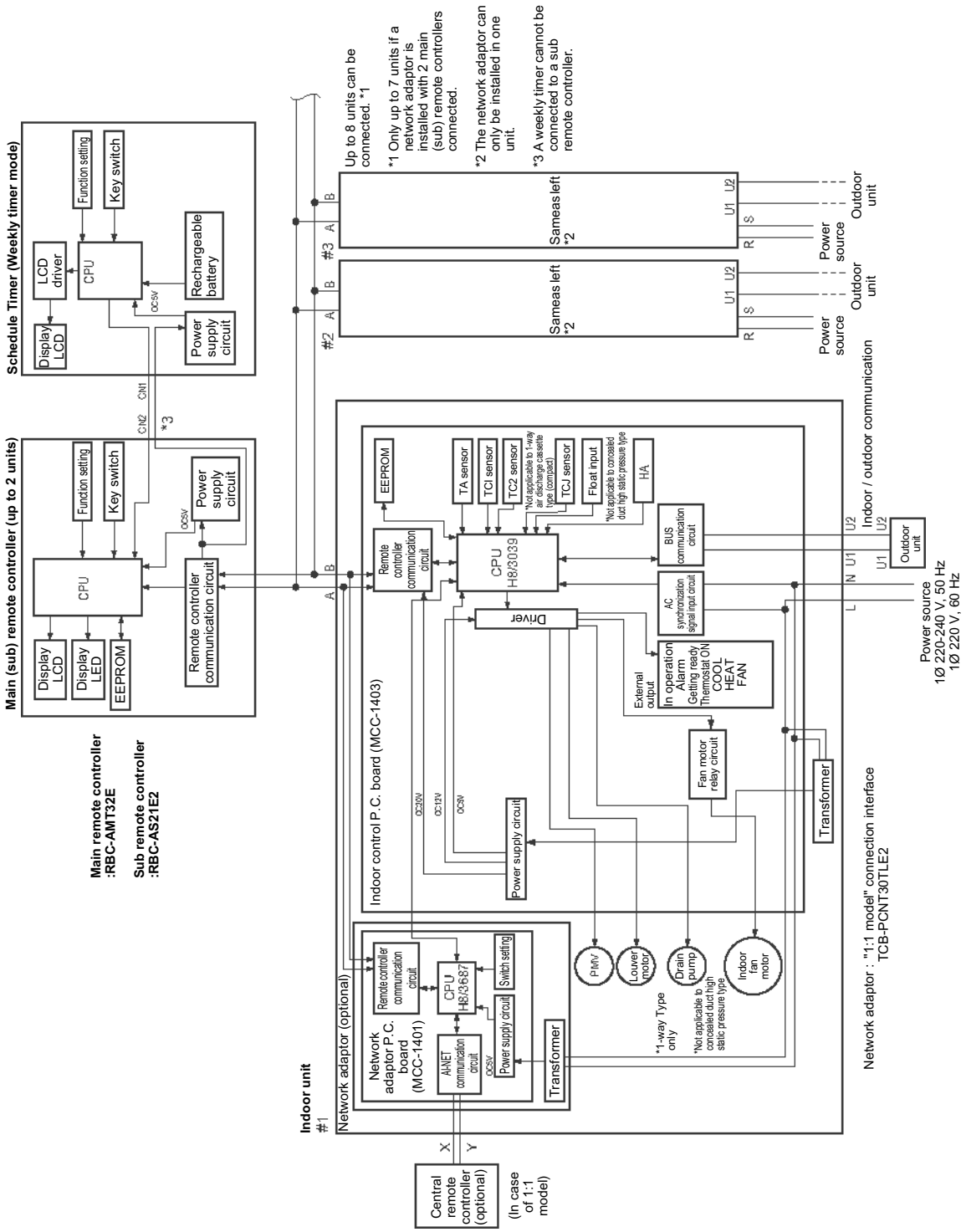

5-1-2. When wireless remote controller kit connected

<Compact 4-way cassette type, 1-way cassette (SH) type, ceiling type, concealed duct standard type, slim duct type>

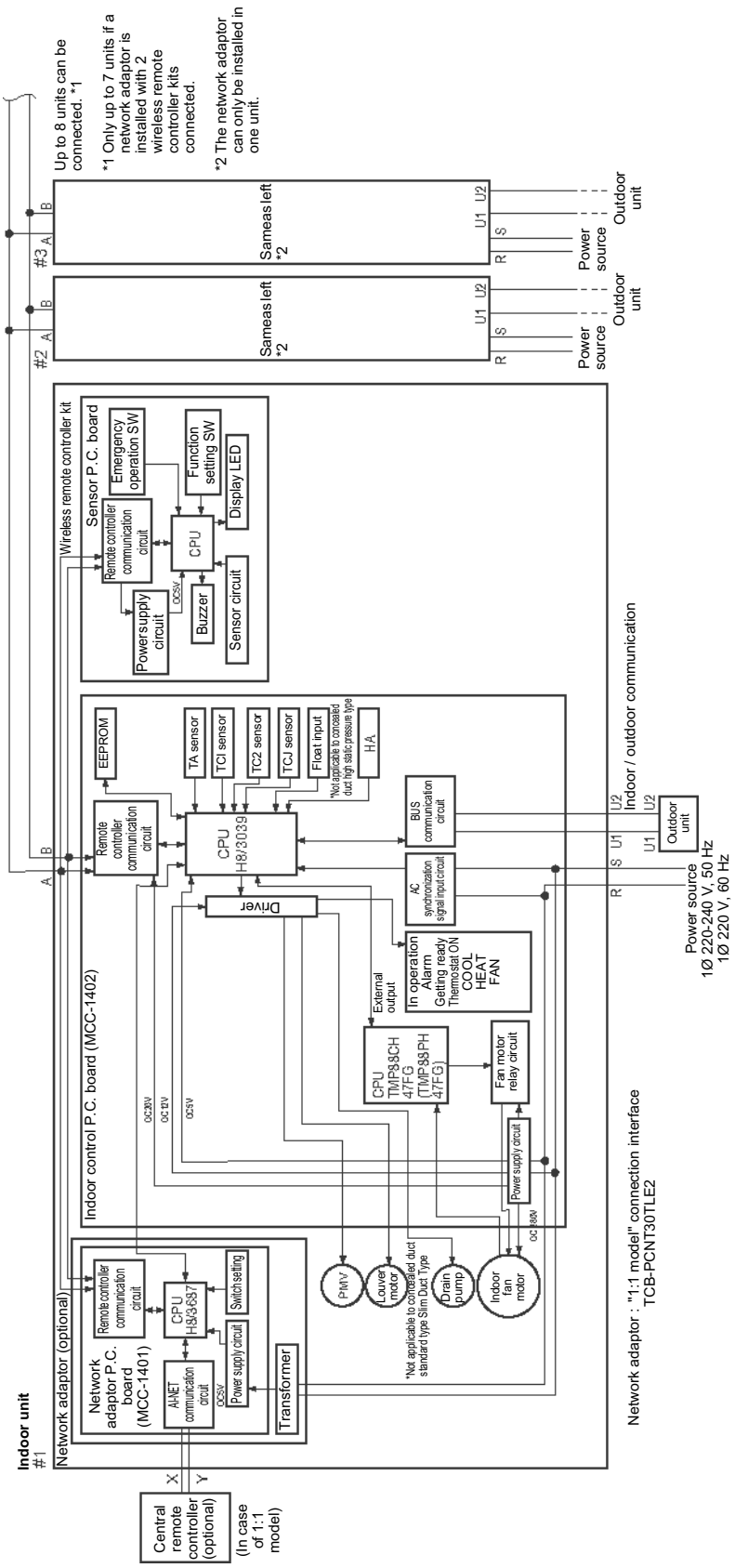

<1-way cassette (YH) type, floor standing type, concealed duct high static pressure type, floor standing concealed type, floor standing cabinet type>

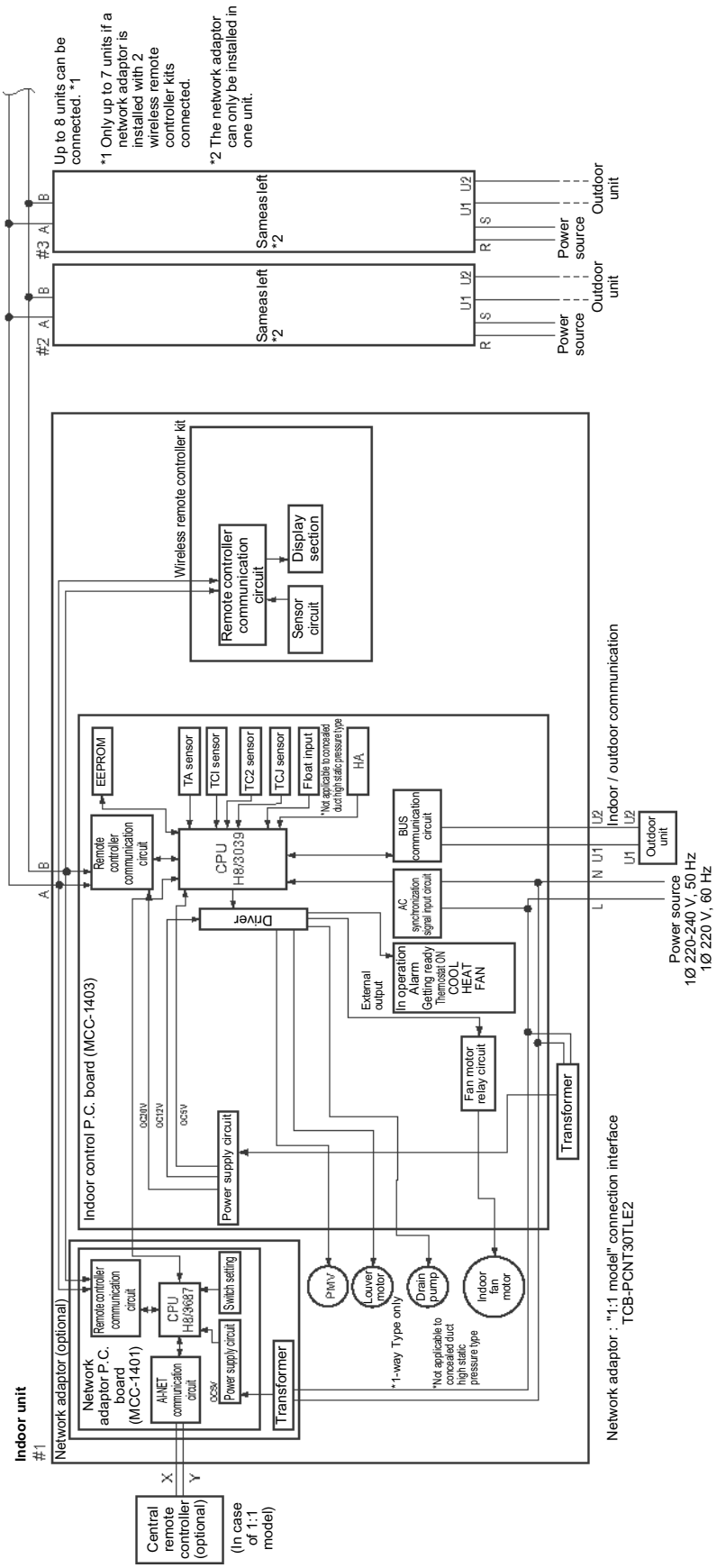

5-1-3. When both main (sub) remote controller and wireless remote controller kit connected

<Compact 4-way cassette type, 1-way cassette (SH) type, ceiling type, concealed duct standard type, slim duct type>

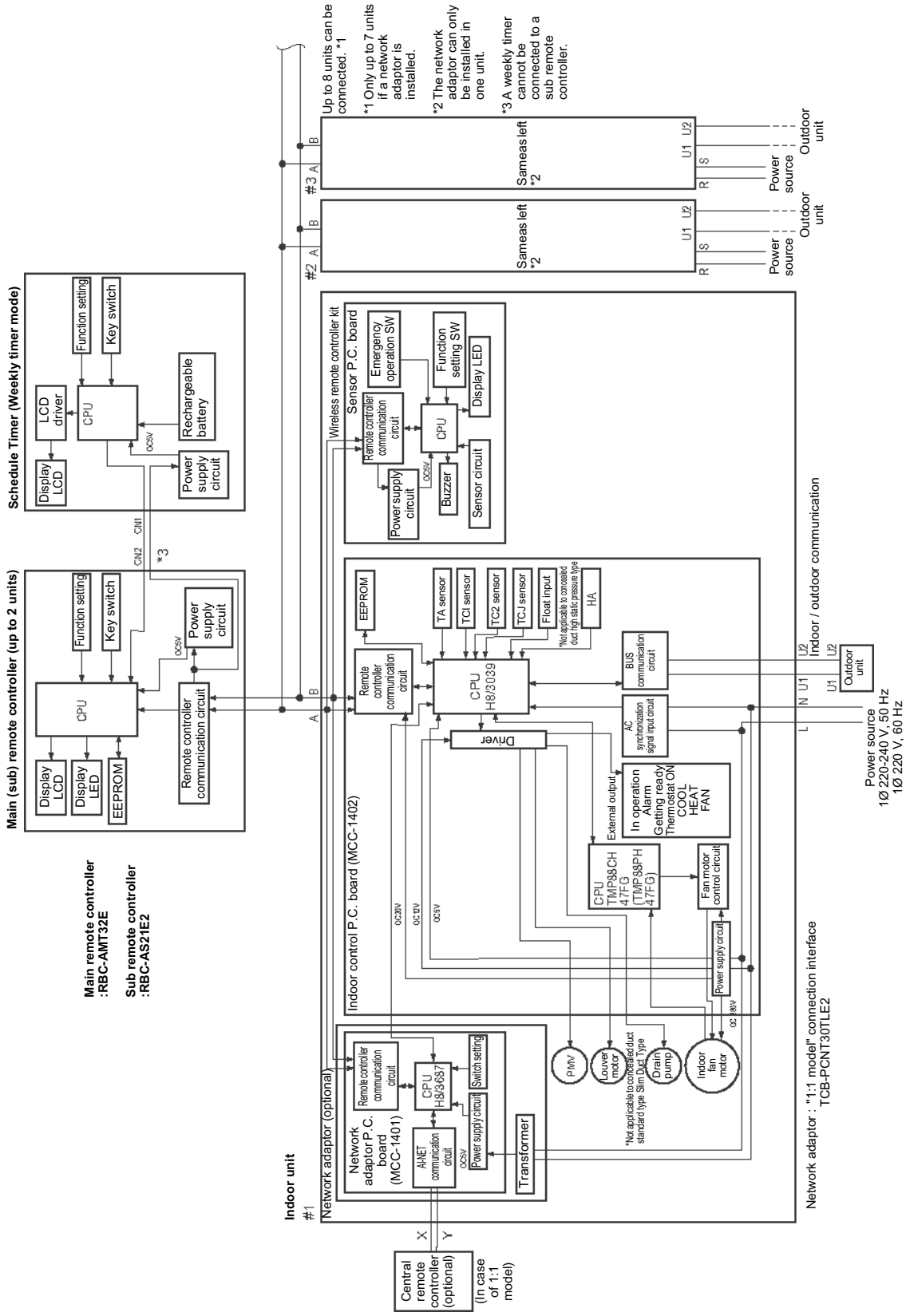

<1-way cassette (YH) type, floor standing type, concealed duct high static pressure type, floor standing concealed type, floor standing cabinet type>

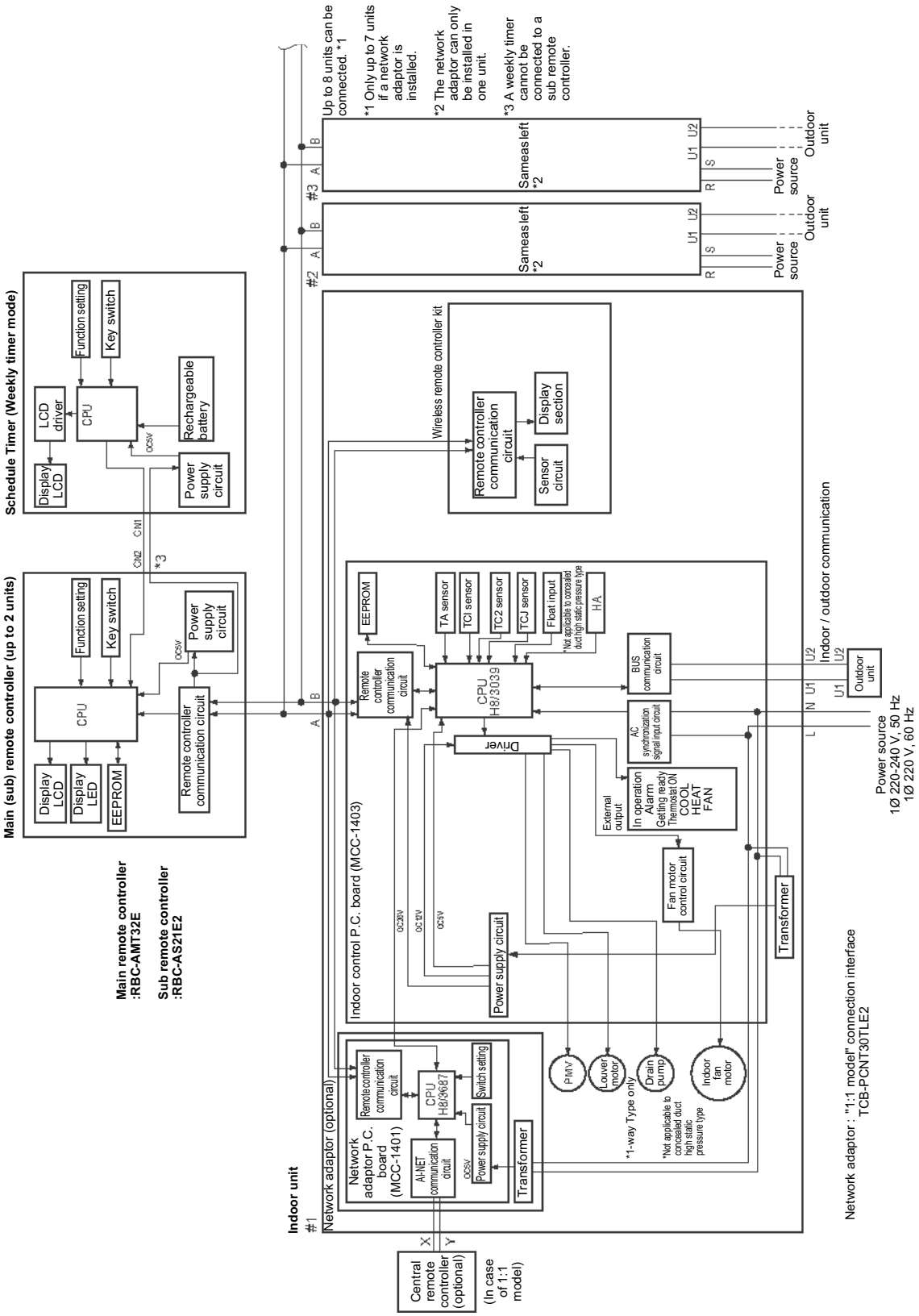

5-2. Indoor printed circuit board

MCC-1402 <compact 4-way cassette type, 1-way cassette (SH) type, ceiling type, concealed duct standard type, slim duct type>

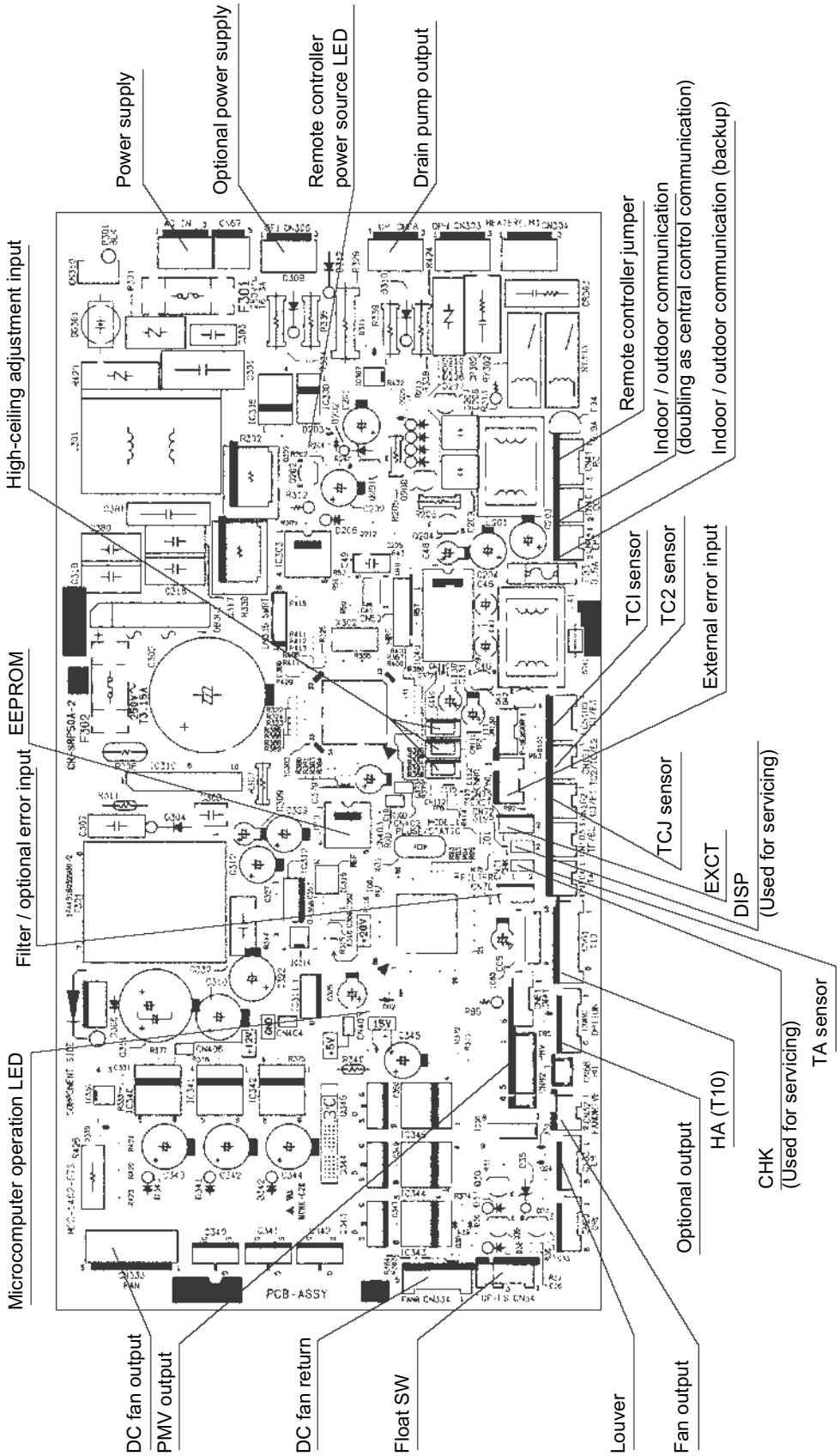

MCC-1403 <1-way cassette (YH) type, floor standing type, concealed duct high static pressure type, floor standing concealed type, floor standing cabinet type>

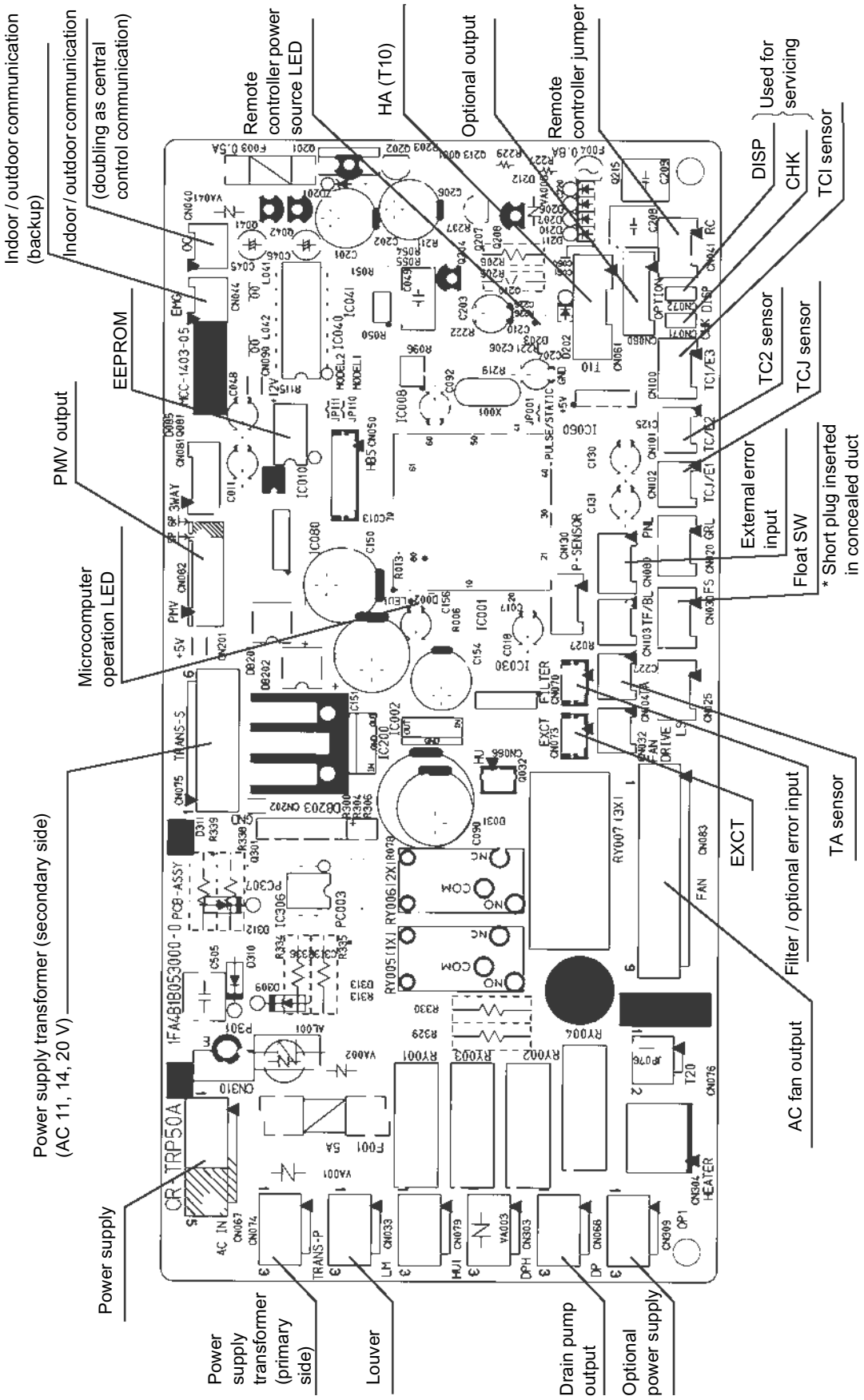

5-3. Optional connector specifications of indoor P.C. board

Function	Connector No.	Pin No.	Specification	Remarks
Fan output	CN32	1	DC12 V	Factory default setting: ON when indoor unit in operation and OFF when indoor unit at rest * Fan can be operated on its own by pressing FAN button on remote controller (DN = 31)
		2	Output	
HA	CN61	1	Start / stop input	Start / stop input for HA (J01: In place / Removed = Pulse input (factory default) / Step input)
		2	0 V (COM)	
		3	Remote controller disabling input	Enables / disables start / stop control via remote controller
		4	In-operation output	ON during operation (HA answerback signal)
		5	DC12 V (COM)	
		6	Alarm output	ON while alarm ON
Optional output	CN60	1	DC12 V (COM)	
		2	Defrosting output	ON while outdoor unit defrosted
		3	Thermostat ON output	ON while real thermostat ON (compressor ON)
		4	Cooling output	ON while air conditioner in cooling or related operation (COOL, DRY or cooling under AUTO mode)
		5	Heating output	ON while air conditioner in heating operation (HEAT or heating under AUTO mode)
		6	Fan output	ON while indoor fan ON (air cleaner in use or via interlock wiring)
External error input	CN80	1	DC12 V (COM)	Generates test code L30 and automatically shuts down air conditioner (only if condition persists for 1 minute)
		2	DC12 V (COM)	
		3	External error input	
CHK Operation check	CN71	1	Check mode input	Used for indoor operation check (prescribed operational status output, such as indoor fan "H" or drain pump ON, to be generated without communication with outdoor unit or remote controller)
		2	0 V	
DISP Display mode	CN72	1	Display mode input	Product display mode - Communication just between indoor unit and remote controller enabled (upon turning on of power) Timer short-circuited out (always)
		2	0 V	
EXCT Demand	CN73	1	Demand input	Imposes thermostat OFF on indoor unit
		2	0 V	

5-4. Test operation of indoor unit

▼ Check function for operation of indoor unit (Functions at indoor unit side)

This function is provided to check the operation of the indoor unit singly without communication with the remote controller or the outdoor unit. This function can be used regardless of operation or stop of the system.

However, if using this function for a long time, a trouble of the equipment may be caused. Limit using this function within several minutes.

[How to operate]

1) Short-circuit CHK pin (CN71 on the indoor P.C. board).
   The operation mode differs according to the indoor unit status in that time.
   Normal time: Both float SW and fan motor are normal.
   Abnormal time: Either one of float SW or fan motor is abnormal.
2) Restricted to the normal time, if short-circuiting DISP pin (CN72 on the indoor P.C. board) in addition to short-circuit of CHK pin (CN71 on the indoor P.C. board), the minimum opening degree (30 pls) can be set to the indoor PMV only.
   When open DISP pin, the maximum opening degree (1500 pls) can be obtained again.

[How to clear]

Open CHK pin. While the system is operating, it stops once but automatically returns to operation after several minutes.

	Short-circuit of CHK pin		
	Normal time		**Abnormal time**
	DISP pin open	**DISP pin short circuit**	
Fan motor	(H)	(H)	Stop
Indoor PMV (*)	Max. opening degree (1500 pls)	Min. opening degree (30 pls)	Min. opening degree (30 pls)
Louver	Horizontal	Horizontal	Immediate stop
Drain pump	ON	ON	ON
Communication	All ignored	All ignored	All ignored
P.C. board LED	Lights	Lights	Flashes

- To exchange the indoor PMV coil, set the indoor PMV to Max. opening degree.
- For the detailed positions of CHK pin (CN71 on indoor P.C. board) and DISP pin (CN72 on indoor P.C. board), refer to the indoor P.C. board MCC-1570.

5-5. Method to set indoor unit function DN code

(When performing this task, be sure to use a wired remote controller.)

<Procedure> To be performed only when system at rest

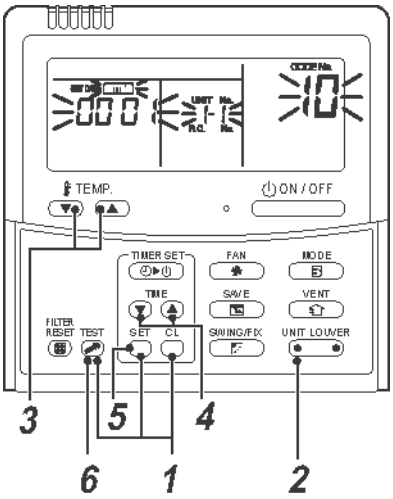

1 **Push the TEST + SET + CL buttons simultaneously and hold for at least 4 seconds.**

The unit No. displayed first is the address of the header indoor unit in group control.

Then the fan and louver of the selected indoor unit move.

2 **Each time the "Select unit" side of the UNIT LOUVER button is pressed, one of the indoor unit Nos. under group control is displayed in turn. Then the fan and louver of the selected indoor unit move.**

3 **Use the TEMP. button to select the CODE No. (DN code) of the desired function.**

4 **Use the TIME button to select the desired SET DATA associated with the selected function.**

5 **Push the SET button. (The display changes from flashing to steady.)**

- To change the selected indoor unit, go back to step ***2***.
- To change the selected function, go back to step ***3***.

6 **When the SET button is pushed, the system returns to normal off state.**

Function CODE No. (DN Code) table (includes all functions needed to perform applied control on site)

DN	Item	Description	At shipment
01	Filter display delay timer	0000: None 0001: 150H 0002: 2500H 0003: 5000H 0004: 10000H	According to type
02	Dirty state of filter	0000: Standard 0001: High degree of dirt (Half of standard time)	0000: Standard
03	Central control address	0001: No.1 unit to 0064: No.64 unit 0099: Unfixed	0099: Unfixed
04	Specific indoor unit priority	0000: No priority 0001: Priority	0000: No priority
06	Heating temp shift	0000: No shift 0001: +1 °C 0002: +2 °C to 0010: +10 °C (Up to +6 recommended)	0002: +2 °C (Floor type 0000: 0 °C)
0d	Existence of [AUTO] mode	0000: Provided 0001: Not provided (Automatic selection from connected outdoor unit)	0001: Not provided
0F	Cooling only	0000: Heat pump 0001: Cooling only (No display of [AUTO] [HEAT])	0000: Heat pump
10	Type	0001: 4-way Cassette etc. * refer to 50 page Type CODE No. [10]	Depending on model type
11	Indoor unit capacity	0000: Unfixed 0001 to 0040	According to capacity type
12	Line address	0001: No.1 unit to 0030: No.30 unit	0099: Unfixed
13	Indoor unit address	0001: No.1 unit to 0064: No.64 unit	0099: Unfixed
14	Group address	0000: Individual 0001: Header unit of group 0002: Follower unit of group	0099: Unfixed
19	Louver type (Air direction adjustment)	0000: No louver 0001: Swing only 0002: (1-way Cassette type, Ceiling type) 0003: (2-way Cassette type) 0004: (4-way Cassette type)	According to type
1E	Temp difference of [AUTO] mode selection COOL → HEAT, HEAT → COOL	0000: 0 deg to 0010: 10 deg (For setup temperature, reversal of COOL / HEAT by ± (Data value) / 2)	0003: 3 deg (Ts±1.5)
28	Automatic restart of power failure	0000: None 0001: Restart	0000: None
2A	Selection of option / error input (CN70)	0000: Filter input 0001: Alarm input (Air washer, etc.) 0002: None	0002: None
2E	HA terminal (CN61) select	0000: Usual 0001: Leaving-ON prevention control 0002: Fire alarm input	0000: Usual (HA terminal)
31	Ventilating fan control	0000: Unavailable 0001: Available	0000: Unavailable
32	TA sensor selection	0000: Body TA sensor 0001: Remote controller sensor	0000: Body TA sensor
33	Temperature unit select	0000: °C (at factory shipment) 0001: °F	0000: °C

<table>
<tr><th>DN</th><th>Item</th><th>Description</th><th>At shipment</th></tr>
<tr><td rowspan="3">5d</td><td>High-ceiling adjustment
(Air flow selection)</td><td colspan="2">1-way cassette (SH)
<table>
<tr><th>Value</th><th>Type</th><th>AP015, AP018</th><th>AP024</th></tr>
<tr><td>0000</td><td>Standard (factory default)</td><td>3.5 m or less</td><td>3.8 m or less</td></tr>
<tr><td>0001</td><td>High-ceiling (1)</td><td>4.0 m or less</td><td>4.0 m or less</td></tr>
<tr><td>0003</td><td>High-ceiling (3)</td><td>4.2 m or less</td><td>4.2 m or less</td></tr>
</table>
Compact 4-way cassette
<table>
<tr><th>SET DATA</th><th>Type</th><th>AP007 to AP012</th><th>AP015</th><th>AP018</th></tr>
<tr><td>0000</td><td>Standard (factory default)</td><td>2.7 m or less</td><td>2.9 m or less</td><td>3.2 m or less</td></tr>
<tr><td>0002</td><td>High-ceiling (2)</td><td>—</td><td>3.2 m or less</td><td>3.4 m or less</td></tr>
<tr><td>0003</td><td>High-ceiling (3)</td><td>—</td><td>3.5 m or less</td><td>3.5 m or less</td></tr>
</table>
Ceiling
<table>
<tr><th>Value</th><th>Type</th><th>AP015 to AP056</th></tr>
<tr><td>0000</td><td>Standard (factory default)</td><td>3.5 m or less</td></tr>
<tr><td>0001</td><td>High-ceiling (1)</td><td>4.0 m or less</td></tr>
</table></td><td rowspan="3">0000: Standard</td></tr>
<tr><td>Built-in filter</td><td colspan="2">4-way cassette
0000: Standard filter (factory default)
Ceiling
0000: Standard filter (factory default)
Concealed duct standard
0000: Standard filter (factory default)
0001: High-performance filter (65 %, 90 %)</td></tr>
<tr><td>Static pressure selection</td><td>Concealed duct standard
0000: Standard (factory default)
0001: High static pressure 1
0003: High static pressure 2
0006: Low static pressure</td><td>Slim Duct
0000: Standard (factory default)
0001: High static pressure 1
0003: High static pressure 2
0006: High static pressure 3</td></tr>
<tr><td>60</td><td>Timer setting
(wired remote controller)</td><td>0000: Available (can be performed)</td><td>0001: Unavailable (cannot be performed)</td><td>0000: Available</td></tr>
<tr><td>92</td><td>External interlock release condition</td><td>0000: Operation stopped</td><td>0001: Release signal received</td><td>0000: Operation stopped</td></tr>
<tr><td>D0</td><td>Whether the power saving mode can be set by the remote controller</td><td>0000: Invalid</td><td>0001: Valid</td><td>0001: Valid</td></tr>
</table>

Type
DN code “10”

Value	Type	Model
0000	1-way Cassette	MMU-AP∗∗∗SH
0001*[1]	4-way Cassette	MMU-AP∗∗∗H
0002	2-way Cassette	MMU-AP∗∗∗WH
0003	1-way Cassette (Compact)	MMU-AP∗∗∗YH
0004	Concealed Duct Standard	MMD-AP∗∗∗BH
0005	Slim Duct	MMD-AP∗∗∗SPH (SH)
0006	Concealed Duct High Static Pressure	MMD-AP∗∗∗H
0007	Ceiling	MMC-AP∗∗∗H
0008	High Wall	MMK-AP∗∗∗H
0010	Floor Standing Cabinet	MML-AP∗∗∗H
0011	Floor Standing Concealed	MML-AP∗∗∗BH
0013	Floor Standing	MMF-AP∗∗∗H
0014	Compact 4-way Cassette	MMU-AP∗∗∗MH
0016	Fresh Air Intake indoor unit (Duct type)	MMD-AP∗∗∗HFE

*1 Default value stored in EEPROM mounted on service P.C. board

Indoor Unit Capacity
DN code “11”

Value	Capacity
0000*	Invalid
0040	005 type
0001	007 type
0003	009 type
0005	012 type
0007	015 type
0009	018 type
0011	024 type
0012	027 type
0013	030 type
0015	036 type
0017	048 type
0018	056 type
0021	072 type
0023	096 type
~	–

*1 Default value stored in EEPROM mounted on service P.C. board

5-6. Applied control of indoor unit

Control system using remote controller interface (TCB-IFCB4E2)

Wiring and setting

- In the case of group control, the control system functions as long as it is connected to one of the indoor units (control P.C. board) in the group. If it is desired to access the operation and error statuses of other units, relevant signals must be brought to it from those units individually.

▼ Control items

(1) Start / Stop input signal	Start / stop of unit
(2) In-operation signal	Output present while unit in normal operation
(3) Error signal	Output present while alarm (e.g. serial communication error or operation of protective device for indoor / outdoor unit) being activated

▼ Wiring diagram of control system using remote controller interface (TCB-IFCB4E2)

Input IFCB4E2: No-voltage ON / OFF serial signal

Output No-voltage contact (in-operation and error indication)
Contact capacity: Max. AC 240 V, 0.5 A

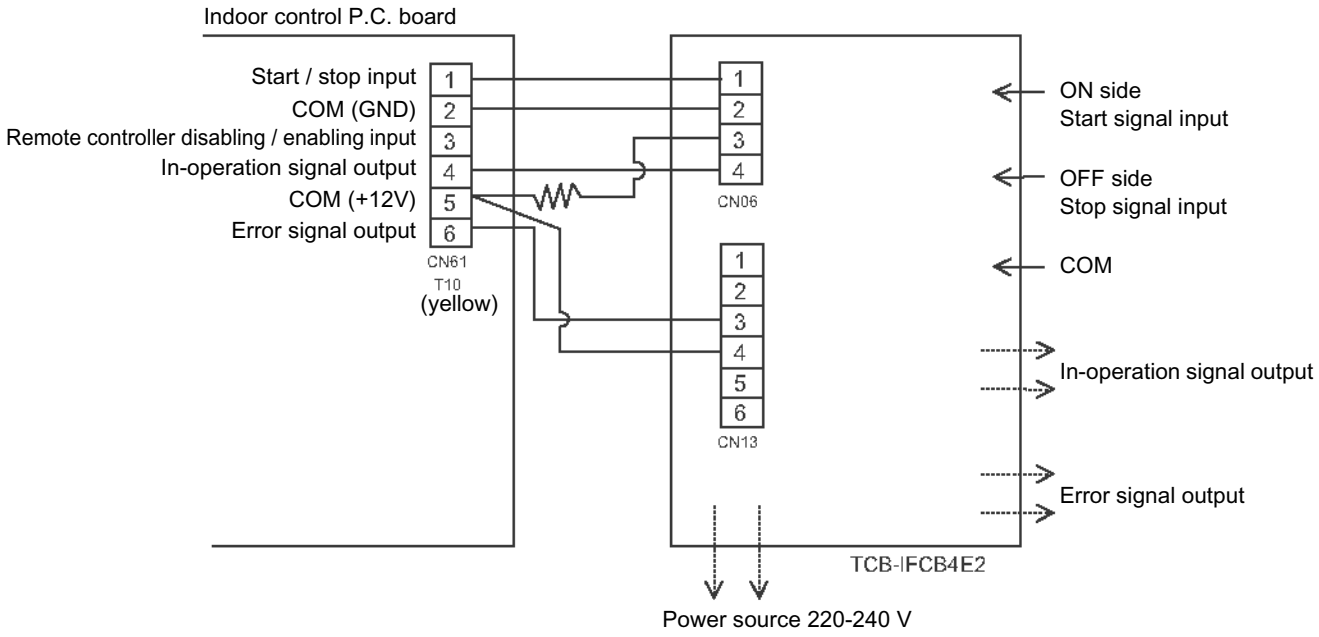

▼ Ventilating fan control from remote controller

[Function]

- The start / stop operation can be operated from the wired remote controller when air to air heat exchanger or ventilating fan is installed in the system.
- The fan can be operated even if the indoor unit is not operating.
- Use a fan which can receive the no-voltage A contact as an outside input signal.
- In a group control, the units are collectively operated and they can not be individually operated.

1. Operation

Handle a wired remote controller in the following procedure.

* Use the wired remote controller during stop of the system.

* Be sure to set up the wired remote controller to the header unit. (Same in group control)

* In a group control, if the wired remote controller is set up to the header unit, both header and follower units are simultaneously operable.

1 **Push concurrently SET + CL + TEST buttons for 4 seconds or more.**

The unit No. displayed firstly indicates the header indoor unit address in the group control.
In this time, the fan of the selected indoor unit turns on.

2 **Every pushing UNIT LOUVER button, the indoor unit numbers in group control are displayed successively.**

In this time, the fan of the selected indoor unit only turns on.

3 **Using the setup temp ▼ or ▲ button, specify the CODE No. *31*.**

4 **Using the timer time ▼ or ▲ button, select the SET DATA. (At shipment: 0000)**

The setup data are as follows:

SET DATA	Handling of operation of air to air heat exchanger or ventilating fan
0000	Unavailable (At shipment)
0001	Available

5 **Push SET button. (OK if display goes on.)**

- To change the selected indoor unit, go to the procedure ***2***).
- To change the item to be set up, go to the procedure ***3***).

6 **Pushing TEST returns the status to the usual stop status.**

2. Wiring

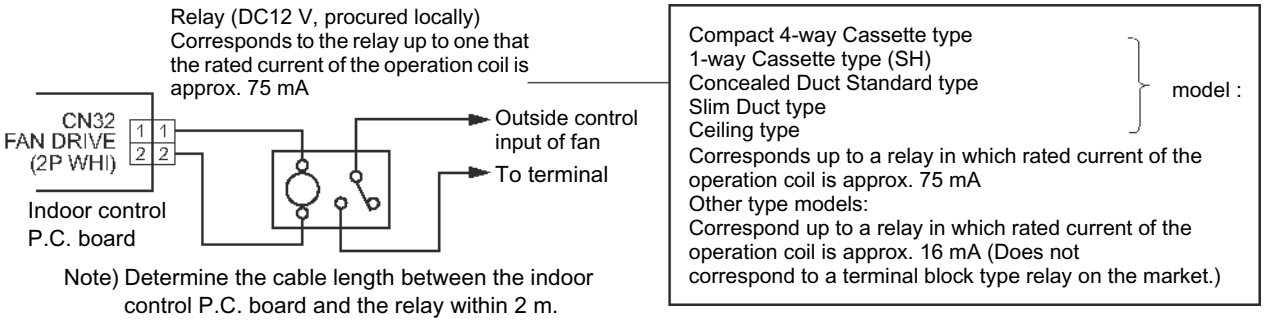

Note) Determine the cable length between the indoor control P.C. board and the relay within 2 m.

▼ Leaving-ON prevention control

[Function]

- This function controls the indoor units individually. It is connected with cable to the control P.C. board of the indoor unit.
- In a group control, it is connected with cable to the indoor unit (Control P.C. board), and the CODE No. 2E is set to the connected indoor unit.
- It is used when the start operation from outside if unnecessary but the stop operation is necessary.
- Using a card switch box, card lock, etc, the forgotten-OFF of the indoor unit can be protected.
- When inserting a card, start / stop operation from the remote controller is allowed.
- When taking out a card, the system stops if the indoor unit is operating and start / stop operation from the remote controller is forbidden.

1. Control items

1) Outside contact ON: The start / stop operation from the remote controller is allowed.
(Status that card is inserted in the card switch box)

2) Outside contact OFF: If the indoor unit is operating, it is stopped forcedly.
(Start / Stop prohibited to remote controller)
(Status that card is taken out from the card switch box)

* When the card switch box does not perform the above contact operation, convert it using a relay with b contact.

2. Operation

Handle the wired remote controller switch in the following procedure.

* Use the wired remote controller switch during stop of the system.

1 **Push concurrently SET + CL + TEST buttons for 4 seconds or more.**

2 **Using the setup temp ▼ or ▲ button, specify the CODE No. 2E.**

3 **Using the timer time ▼ or ▲ button, set 0001 to the SET DATA.**

4 **Push SET button.**

5 **Push TEST button. (The status returns to the usual stop status.)**

3. Wiring

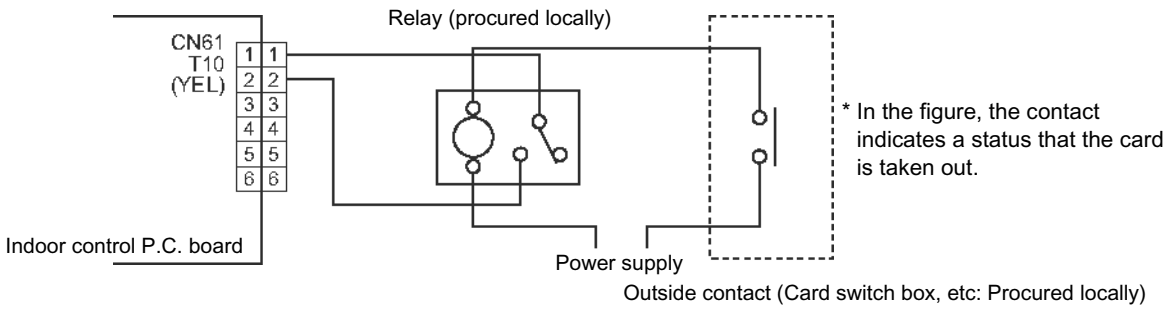

Note) Determine the cable length between the indoor control P.C. board and the relay within 2 m.

▼ Power peak-cut from indoor unit

When the relay is turned on, a forced thermostat-OFF operation starts.

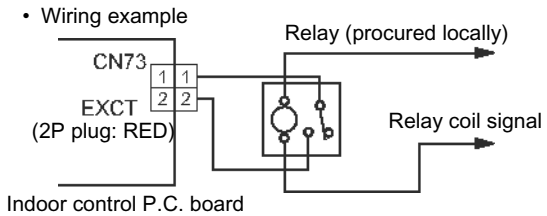

Note) Determine the cable length between the indoor or outdoor control P.C. board and the relay within 2 m.

Manual address setting using the remote controller

Procedure when setting indoor units' addresses first under the condition that indoor wiring has been completed and outdoor wiring has not been started (manual setting using the remote controller)

▼ Wiring example of 2 refrigerant lines

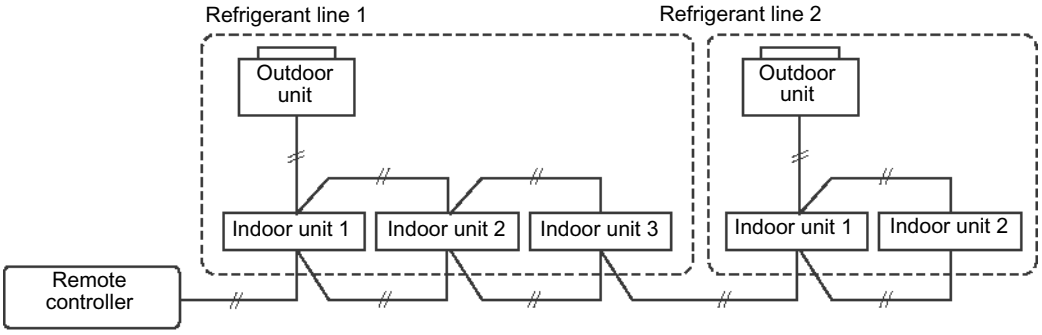

Line (system) address	1	1	1		2	2
Indoor unit address	1	2	3		1	2
Group address	1 Header unit	2 Follower unit	2 Follower unit		2 Follower unit	2 Follower unit

In the example above, disconnect the remote controller connections between the indoor units and connect a wired remote controller to the target unit directly before address setting.

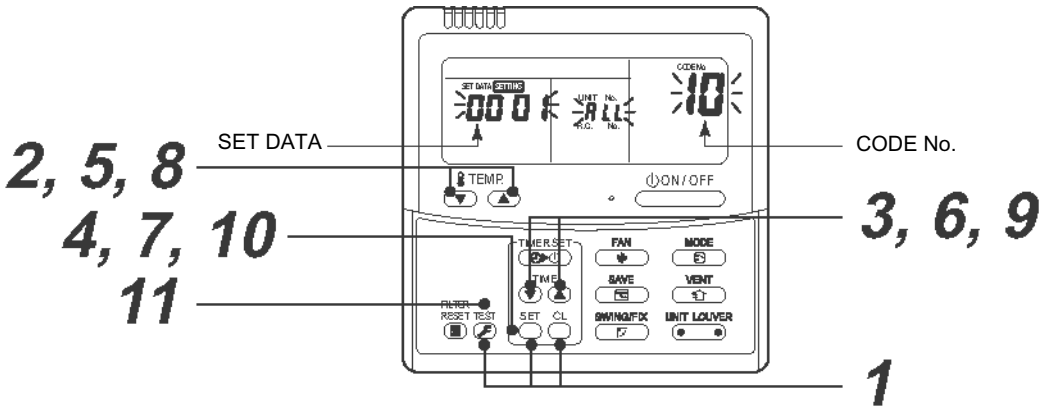

Pair the indoor unit to set and the remote controller one-to-one.

Turn on the power.

1 **Push and hold the SET, CL, and TEST buttons at the same time for more than 4 seconds.**
LCD starts flashing.

<Line (system) address>

2 **Push the TEMP. ▼ / ▲ buttons repeatedly to set the CODE No. to 12.**

3 **Push the TIME ▼ / ▲ buttons repeatedly to set a system address.**
(Match the address with the address on the interface P.C. board of the header outdoor unit in the same refrigerant line.)

4 **Push SET button.**
(It is OK if the display turns on.)

<Indoor unit address>

5 **Push the TEMP. ▼ / ▲ buttons repeatedly to set the CODE No. to 13.**

6 **Push the TIME ▼ / ▲ buttons repeatedly to set an indoor unit address.**

7 **Push the SET button.**
(It is OK if the display turns on.)

<Group address>

8 **Push the TEMP. ▼ / ▲ buttons repeatedly to set the CODE No. to 14.**

9 **Push the TIME ▼ / ▲ buttons repeatedly to set a group address. If the indoor unit is individual, set the address to 0000 ; header unit, 0001 ; follower unit, 0002 .**

Individual	: 0000	
Header unit	: 0001	In case of group control
Follower unit	: 0002	

10 **Push the SET button.**
(It is OK if the display turns on.)

11 **Push the TEST button.**
The address setting is complete.
(SETTING flashes. You can control the unit after SETTING has disappeared.)

NOTE

1. **Do not use address numbers 29 or 30 when setting system addresses using the remote controller. These 2 address numbers cannot be used on outdoor units and the CODE No. [E04] (Indoor / outdoor communication error) will appear if they are mistakenly used.**
2. **If you set addresses to indoor units in 2 or more refrigerate lines manually using the remote controller and will control them centrally, set the header outdoor unit of each line as below.**
   - Set a system address for the header outdoor unit of each line with SW13 and 14 of their interface P.C. boards.
   - Turn off dip switch 2 of SW30 on the interface P.C. boards of all the header outdoor units connected to the same central control, except the unit that has the lowest address. (For unifying the termination of the wiring for the central control of indoor and outdoor units)
   - Connect the relay connectors between the [U1, U2] and [U3, U4] terminals on the header outdoor unit of each refrigerate line.
   - After finishing all the settings above, set the address of the central control devices. (For the setting of the central control address, refer to the installation manuals of the central control devices.)

Confirming the indoor unit addresses and the position of an indoor unit using the remote controller

◆Confirming the numbers and positions of indoor units

To see the indoor unit address of an indoor unit which you know the position of

▼When the unit is individual (the indoor unit is paired with a wired remote controller one-to-one), or it is a group-controlled one.

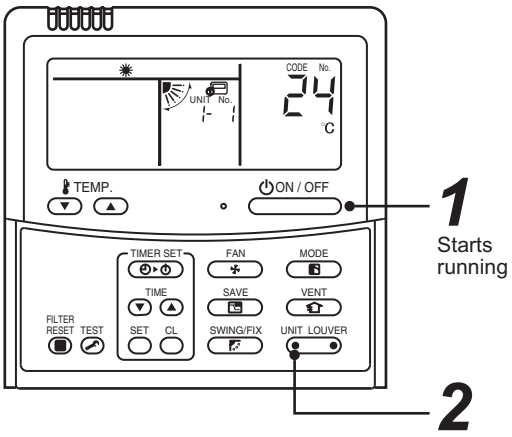

(Execute it while the units are running.)

1 **Push the (I)ON/OFF button if the units stop.**

2 **Push the UNIT LOUVER button (left side of the button).**

A unit numbers 1-1 is indicated on the LCD (it will disappear after a few seconds). The indicated number shows the system address and indoor unit address of the unit.

When 2 or more indoor units are connected to the remote controller (group-controlled units), a number of other connected units appears each time you push the UNIT LOUVER button (left side of the button).

To find an indoor unit's position from its address

▼ When checking unit numbers controlled as a group

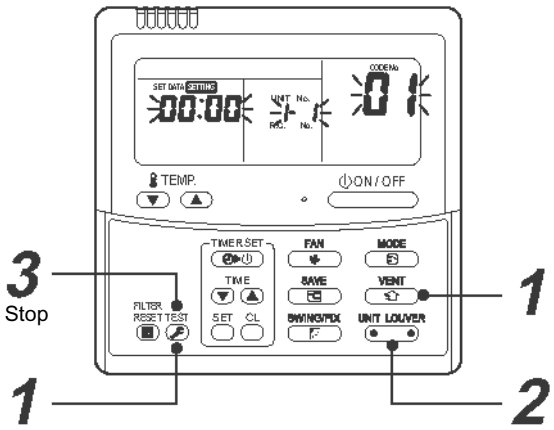

(Execute it while the units are stopped.)
The indoor unit numbers in a group are indicated one after another. The fan and louvers of the indicated units are activated.

1 **Push and hold the VENT and TEST buttons at the same time for more than 4 seconds.**
- ALL appears on UNIT No. on the LCD display.
- The fans and louvers of all the indoor units in the group are activated.

2 **Push the UNIT LOUVER button (left side of the button). Each time you push the button, the indoor unit numbers are indicated one after another.**
- The first-indicated unit number is the address of the header unit.
- Only the fan and louvers of the indicated indoor unit are activated.

3 **Push the TEST button to finish the procedure.**
All the indoor units in the group stop.

▼ **To check all the indoor unit addresses using an arbitrary wired remote controller.**
(When communication wirings of 2 or more refrigerant lines are interconnected for central control)

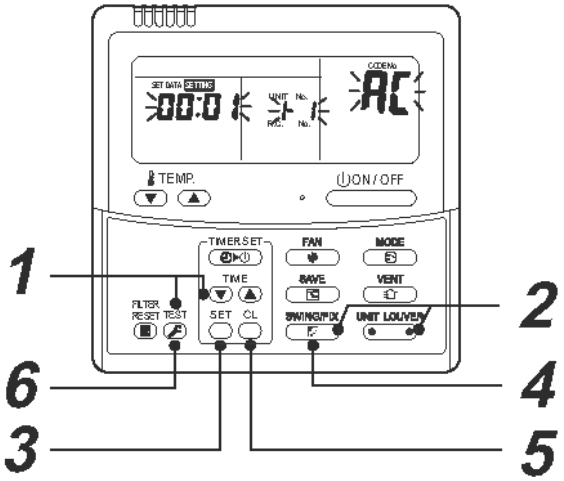

(Execute it while the units are stopped.)
You can check indoor unit addresses and positions of the indoor units in a single refrigerant line.
When an outdoor unit is selected, the indoor unit numbers of the refrigerant line of the selected unit are indicated one after another and the fan and louvers of the indicated indoor units are activated.

1 **Push and hold the TIME ▼ and TEST buttons at the same time for more than 4 seconds.**
At first, the line 1 and CODE No. AC (Address Change) are indicated on the LCD display. (Select an outdoor unit.)

2 **Push the UNIT LOUVER (left side of the button) and SWING/FIX buttons repeatedly to select a system address.**

3 **Push the SET button to confirm the system address selection.**
- The address of an indoor unit connected to the selected refrigerant line is indicated on the LCD display and its fan and louvers are activated.

4 **Push the UNIT LOUVER button (left side of the button). Each time you push the button, the indoor unit numbers of the selected refrigerant line are indicated one after another.**
- Only the fan and louvers of the indicated indoor unit are activated.

◆To select another system address

5 **Push the CL CL button to return to step *2*.**
- After returning to step *2*, select another system address and check the indoor unit addresses of the line.

6 **Push the TEST button to finish the procedure.**

◆Changing the indoor unit address using a remote controller

To change an indoor unit address using a wired remote controller.

▼ The method to change the address of an individual indoor unit (the indoor unit is paired with a wired remote controller one-to-one), or an indoor unit in a group.
(The method is available when the addresses have already been set automatically.)

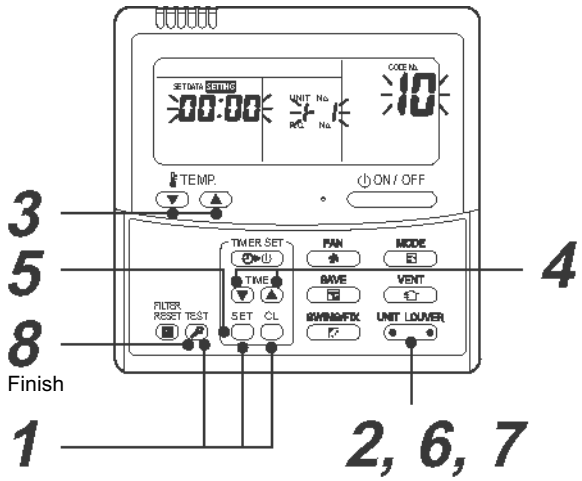

(Execute it while the units are stopped.)

1 **Push and hold the SET, CL, and TEST buttons at the same time for more than 4 seconds.**
(If 2 or more indoor units are controlled in a group, the first indicated UNIT No. is that of the head unit.)

2 **Push the UNIT LOUVER button (left side of the button) repeatedly to select an indoor unit number to change if 2 or more units are controlled in a group. (The fan and louvers of the selected indoor unit are activated.)**
(The fan of the selected indoor unit is turned on.)

3 **Push the TEMP. ▼ / ▲ buttons repeatedly to select 13 for CODE No..**

4 **Push the TIME ▼ / ▲ buttons repeatedly to change the value indicated in the SET DATA section to that you want.**

5 **Push the SET button.**

6 **Push the UNIT LOUVER button (left side of the button) repeatedly to select another indoor UNIT No. to change.**
Repeat steps ***4*** to ***6*** to change the indoor unit addresses so as to make each of them unique.

7 **Push the UNIT LOUVER button (left side of the button) to check the changed addresses.**

8 **If the addresses have been changed correctly, push the TEST button to finish the procedure.**

▼ To change all the indoor unit addresses using an arbitrary wired remote controller.
(The method is available when the addresses have already been set automatically.)

(When communication wirings of 2 or more refrigerant lines are interconnected for central control)

NOTE

You can change the addresses of indoor units in each refrigerant line using an arbitrary wired remote controller.

* Enter the address check / change mode and change the addresses.

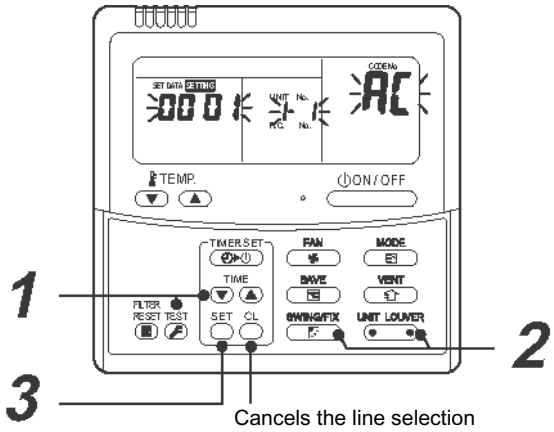

If no number appears on UNIT No., no outdoor unit exists on the line. Push CL button and select another line following step *2*.

(Execute it while the units are stopped.)

1 **Push and hold the TIME ▼ / ▲ buttons at the same time for more than 4 seconds.**
At first, the line 1 and CODE No. AC (Address Change) are indicated on the LCD display.

2 **Push UNIT LOUVER (left side of the button) and SWING/FIX buttons repeatedly to select a system address.**

3 **Push the SET button.**

- The address of one of the indoor units connected to the selected refrigerant line is indicated on the LCD display and the fan and louvers of the unit are activated.
  At first, the current indoor unit address is displayed in SET DATA.
  (No system address is indicated.)

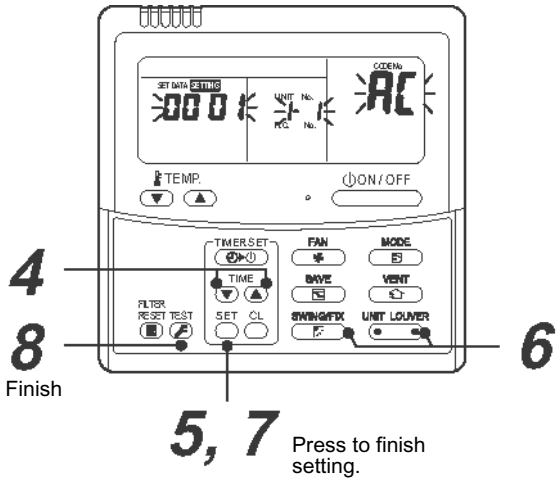

4 **Push the TIME ▼ / ▲ buttons repeatedly to change the value of the indoor unit address in SET DATA.**
Change the value in SET DATA to that of a new address.

5 **Push the SET button to confirm the new address on SET DATA.**

6 **Push the UNIT LOUVER button (left side of the button) repeatedly to select another address to change. Each time you push the button, the indoor unit numbers in a refrigerant line are indicated one after another. Only the fan and louvers of the selected indoor unit are activated.**
Repeat steps ***4*** to ***6*** to change the indoor unit addresses so as to make each of them unique.

7 **Push the SET button.**
(All the segments on the LCD display light up.)

8 **Push the TEST button to finish the procedure.**

◆Error clearing function

How to clear the error using the wired remote controller

▼Clearing an error of the outdoor unit
Clear the currently detected outdoor unit for each refrigerant line to which the indoor unit controlled by the remote controller is connected. (The indoor unit error is not cleared.)
Use the service monitoring function of the remote controller.

1. **Push and hold the CL, and TEST for 4 seconds or longer to enter the service monitoring mode.**
2. **Push the TEMP. button to set CODE No. to "FF".**
3. **The display in A of the following figure counts down as follows at 5-second intervals: "0005" → "0004" → "0003" → "0002" → "0001" → "0000".**
   The error is cleared when "0000" appears.
   However, the display counts down from **"0005"** again.
4. **Push the TEST to return the display to normal.**

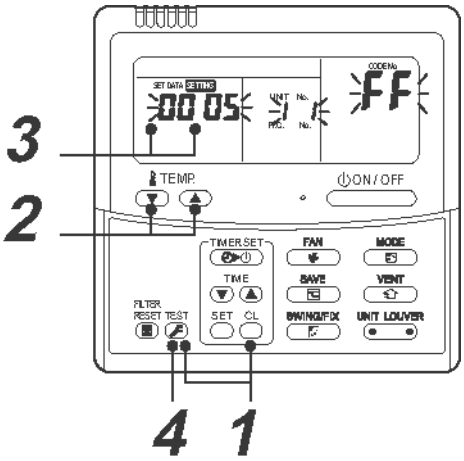

▼Clearing an error of the indoor unit
Push the ON/OFF button on the remote controller.
(Only the error of the indoor unit controlled by the remote controller will be cleared.)

◆ Monitoring function of wired remote controller

The following monitoring function is available if the remote controller of RBC-ATM32E is used.

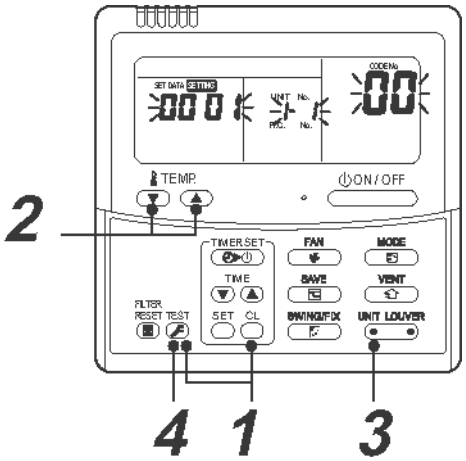

▼ Content

Enter the service monitoring mode using the remote controller to check the sensor temperature or operation status of the remote controller, indoor unit, and outdoor unit.

1. **Push and hold the TEST, and CL for 4 seconds or longer to enter the service monitoring mode. The service monitor lights up. The temperature of CODE No. 00 appears at first.**
2. **Push the TEMP. button to change to CODE No. of the item to monitor. Refer to the following table for CODE No.**
3. **Push the left part of the UNIT LOUVER button to change to the item to monitor. Monitor the sensor temperature or operation status of the indoor unit and outdoor unit in the refrigerant line**
4. **Push the TEST to return the display to normal.**

◆Target outdoor unit (SMMS, SHRM, Mini-SMMS – Series 1 – 2)

	CODE No.	Data	Format	Unit	Remote controller display example
Indoor unit data	00	Room temperature (in control) *1	×1	°C	[0024]=24 °C
	01	Room temperature (Remote controller)	×1	°C	
	02	Air Temperature (TA)	×1	°C	
	03	Coil Temperature (TCJ)	×1	°C	
	04	Coil Temperature (TC2)	×1	°C	
	05	Coil Temperature (TC1)	×1	°C	
	08	PMV	×1	pls	[0050]=500 pls
System data	0A	Number of connected indoor units	×1	–	[0048]=48
	0B	Total horse power of connected indoor units	×1	HP	[0415]=41.5 HP
	0C	Number of connected outdoor units	×1	–	[0004]=4
	0D	Total horse power of outdoor units	×1	HP	[0420]=42 HP

	CODE No.				Data	Format	Unit	Remote controller display example
	U1	U2	U3	U4				
Individual data 1 of outdoor unit *3	10	20	30	40	Discharge temperature of compressor 1 (Td1)	×1	°C	[0024]=24 °C
	11	21	31	41	Discharge temperature of compressor 2 (Td2)	×1	°C	
	12	22	32	42	Detection pressure of high-pressure sensor (Pd)	×1	MPa	[0123]=1.23 MPa
	13	23	33	43	Detection pressure of low-pressure sensor (Ps)	×1	MPa	
	14	24	34	44	Suction Temperature (TS)	×1	°C	[0024]=24 °C
	15	25	35	45	Coil Temperature 1 (TE)	×1	°C	
	16	26	36	46	Liquid Temperature (TL)	×1	°C	
	17	27	37	47	Outdoor Temperature (TO)	×1	°C	
	18	28	38	48	Low-pressure saturation temperature (TU)	×1	°C	
	19	29	39	49	Current of compressor 1 (I1)	×1	A	[0135]=13.5 A
	1A	2A	3A	4A	Current of compressor 2 (I2)	×1	A	
	1B	2B	3B	4B	PMV1 + 2	×1	pls	[0050]=500 pls
	1C	2C	3C	4C	PMV3	×1	pls	[0050]=500 pls
	1D	2D	3D	4D	Compressor 1, 2 ON/OFF	*2	–	
	1E	2E	3E	4E	Outdoor fan mode	×1	–	[0031]=Mode 31
	1F	2F	3F	4F	Horse power of outdoor unit	×1	HP	[0016]=16HP

*1 In the case of group connection, only the header indoor unit data can be displayed.
*2 01 ... Only compressor 1 is on
10 ... Only compressor 2 is on
11 ... Both compressor 1 and 2 are on
*3 The upper digit of CODE No. indicates the outdoor unit No.
U1 outdoor unit (Header unit)
U2 outdoor unit (follower unit 1)
U3 outdoor unit (follower unit 2)
U4 outdoor unit (follower unit 3)

◆Target outdoor unit (SMMS-i – Series 4)

	CODE No.	Data	Format	Unit	Remote controller display example
Indoor unit data *2	00	Room temperature (in control)	×1	°C	[0024]=24 °C
	01	Room temperature (Remote controller)	×1	°C	
	02	Air Temperature (TA)	×1	°C	
	03	Coil Temperature (TCJ)	×1	°C	
	04	Coil Temperature (TC2)	×1	°C	
	05	Coil Temperature (TC1)	×1	°C	
	06	Discharge temperature (TF) *1	×1	°C	
	08	PMV	×1/10	pls	[0150]=1500 pls
	F9	Air Suction Temperature of direct expansion coil (TSA) *1	×1	°C	[0024]=24 °C
	FA	Outdoor Air Temperature (TOA) *1	×1	°C	
System data	0A	Number of connected indoor units	×1	–	[0048]=48
	0B	Total horse power of connected indoor units	×10	HP	[0415]=41.5HP
	0C	Number of connected outdoor units	×1	–	[0004]=4
	0D	Total horse power of outdoor units	×10	HP	[0420]=42HP

	CODE No.				Data	Format	Unit	Remote controller display example
	U1	U2	U3	U4				
Individual data 1 of outdoor unit *3	10	20	30	40	Detection pressure of high-pressure sensor (Pd)	×100	MPa	[0123]=1.23 MPa
	11	21	31	41	Detection pressure of low-pressure sensor (Ps)	×100	MPa	
	12	22	32	42	Discharge temperature of compressor 1 (Td1)	×1	°C	[0024]=24 °C
	13	23	33	43	Discharge temperature of compressor 2 (Td2)	×1	°C	
	14	24	34	–	Discharge temperature of compressor 3 (Td3)	×1	°C	
	15	25	35	45	Suction Temperature (TS)	×1	°C	
	16	26	36	46	Coil Temperature 1 (TE1)	×1	°C	
	17	27	37	–	Coil Temperature 2 (TE2)	×1	°C	
	18	28	38	48	Liquid Temperature (TL)	×1	°C	
	19	29	39	49	Outdoor Temperature (TO)	×1	°C	
	1A	2A	3A	4A	PMV1 + 2	×1	pls	[0050]=500 pls
	1B	2B	3B	–	PMV4	×1	pls	
	1C	2C	3C	4C	Current of compressor 1 (I1)	×10	A	[0135]=13.5 A
	1D	2D	3D	4D	Current of compressor 2 (I2)	×10	A	
	1E	2E	3E	–	Current of compressor 3 (I3)	×10	A	
	1F	2F	3F	4F	Outdoor fan current (IFan)	×10	A	

*1 The TF/TSA/TOA sensors are equipped only with some types of indoor units. The data does not appear for other types.
*2 In the case of group connection, only the header indoor unit data can be displayed.
*3 The upper digit of CODE No. indicates the outdoor unit No.
*4 [(The upper digit of CODE No.) – 4] indicates the outdoor unit No.
1✻, 5✻ ... U1 outdoor unit (Header unit)
2✻, 6✻ ... U2 outdoor unit (follower unit 1)
3✻, 7✻ ... U3 outdoor unit (follower unit 2)
4✻, 8✻ ... U4 outdoor unit (follower unit 3)
*5 Only CODE No. 5✻ of U1 outdoor unit (Header unit) is displayed.

	CODE No.				Data	Format	Unit	Remote controller display example
	U1	U2	U3	U4				
Individual data 2 of outdoor unit *4	50	60	70	80	Rotation of compressor 1	×10	rps	[0642]=64.2 rps
	51	61	71	81	Rotation of compressor 2	×10	rps	
	52	62	72	–	Rotation of compressor 3	×10	rps	
	53	63	73	83	Outdoor fan mode	×1	Mode	[0058]=Mode 58
	54	64	74	84	Heat sink temperature of compressor IPDU1	×1	°C	[0024]=24 °C
	55	65	75	85	Heat sink temperature of compressor IPDU2	×1	°C	
	56	66	76	–	Heat sink temperature of compressor IPDU3	×1	°C	
	57	67	77	87	Heat sink temperature of outdoor fan IPDU	×1	°C	
	58	–	–	–	In heat/cool collecting control *5	0: Normal 1: In collecting control		[0010] = In heat collecting control [0001] = In cool collecting control
	59	–	–	–	Pressure release *5	0: Normal 1: In release control		[0010] = In pressure release control
	5A	–	–	–	Discharge temperature release *5			[0001] = In discharge temperature release control
	5B	–	–	–	Terminal unit release (U2 / U3 / U4 outdoor unit) *5			[0100] = In U2 outdoor unit release control [0010] = In U3 outdoor unit release control [0001] = In U4 outdoor unit release control
	5F	6F	7F	8F	Horse power of outdoor unit	×1	HP	[0016]=16HP

*1 The TF / TSA / TOA sensors are equipped only with some types of indoor units. The data does not appear for other types.
*2 In the case of group connection, only the header indoor unit data can be displayed.
*3 The upper digit of CODE No. indicates the outdoor unit No.
*4 [(The upper digit of CODE No.) – 4] indicates the outdoor unit No.
1✻, 5✻ ... U1 outdoor unit (Center unit)
2✻, 6✻ ... U2 outdoor unit (terminal unit 1)
3✻, 7✻ ... U3 outdoor unit (terminal unit 2)
4✻, 8✻ ... U4 outdoor unit (terminal unit 3)
*5 Only CODE No. 5✻ of U1 outdoor unit (Center unit) is displayed.

◆LED display of circuit board

1. D501 (Red)
   - Lights up when the power is turned on (Microcomputer works)
   - Blinks at 1-second intervals (0.5-second): No EEPROM, or writing error
   - Blinks at 10-second intervals (5-second): No DISP mode
   - Blinks at 2-second intervals (1-second): Function change being set (EEPROM)
2. D403 (Red)
   - Lights up (on hardware) when the power is supplied to the remote controller
3. D503 (Yellow): Indoor/Outdoor central control
   - Lights up for the first half 5 seconds while communicating with a central control device
   - Blinks for the second half 5 seconds at 0.2-second intervals (0.1-second) while communicating with the outdoor unit
4. D504 (Green): Remote controller communication
   - The group header unit lights up for the first half 5 seconds while communicating with the remote controller
   - Blinks for the second half 5 seconds at 0.2-second intervals (0.1-second) during communication between group indoor header and follower

6 Troubleshooting

6-1. Overview

(1) Before engaging in troubleshooting

(a) Applicable models

All Super Module Multi (SMMS, SHRM, Mini-SMMS, SMMS-i) models.
(Indoor units: MMO-APOOO, Outdoor units: MMY-MAPOOOO∗, MCY-MAPOOOHT∗)

(b) Tools and measuring devices required

- Screwdrivers (Philips, flat head), spanners, long-nose pliers, nipper, pin to push reset switch, etc.
- Multimeter, thermometer, pressure gauge, etc.

(c) Things to check prior to troubleshooting (behaviors listed below are normal)

NO.	Behavior	Possible cause
1	A compressor would not start	• Could it just be the 3-minute delay period (3 minutes after compressor shutdown)? • Could it just be the air conditioner having gone thermo OFF? • Could it just be the air conditioner operating in fan mode or put on the timer? • Could it just be the system going through initial communication?
2	An indoor fan would not start	• Could it just be cold air discharge prevention control, which is part of heating?
3	An outdoor fan would not start or would change speed for no reason	• Could it just be cooling operation under low outside temperature conditions? • Could it just be defrosting operation?
4	An indoor fan would not stop	• Could it just be the elimination of residual heat being performed as part of the air conditioner shutdown process after heating operation?
5	The air conditioner would not respond to a start / stop command from a remote controller	• Could it just be the air conditioner operation under external or remote controller?

(2) Troubleshooting procedure

When a fault occurs, proceed with troubleshooting in accordance with the procedure shown below.

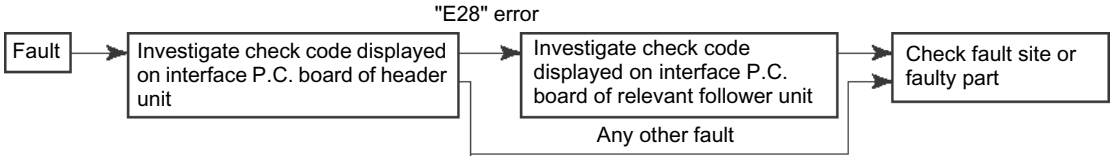

NOTE

Rather than a genuine fault (see the List of Check Codes below), the problem could have been caused by a microprocessor malfunction attributable to a poor quality of the power source or an external noise. Check for possible noise sources, and shield the remote controller wiring and signal wires as necessary.

6-2. Troubleshooting method

The remote controllers (main remote controller and central control remote controller) and the interface P.C. board of an outdoor unit are provided with an LCD display (remote controller) or a 7-segment display (outdoor interface P.C. board) to display operational status. Using this self-diagnosis feature, the fault site / faulty part may be identified in the event of a fault by following the method described below.

The list below summarizes check codes detected by various devices. Analyze the check code according to where it is displayed and work out the nature of the fault in consultation with the list.

- When investigating a fault on the basis of a display provided on the indoor remote controller or TCC-LINK central control remote controller -
  See the “TCC-LINK remote controller or main remote controller display” section of the list.
- When investigating a fault on the basis of a display provided on an outdoor unit - See the “Outdoor 7-segment display” section of the list.
- When investigating a fault on the basis of a display provided on the AI-NET central control remote controller - See the “AI-NET central control display” section of the list.
- When investigating a fault on the basis of a wireless remote controller-controlled indoor unit - See the “Light sensor indicator light block” section of the list.

List of check codes (indoor unit)

(Error detected by indoor unit)

IPDU: Intelligent Power Drive Unit (Inverter P.C. board)
○: Lighting,◎: Flashing,●: Goes off
ALT.: Flashing is alternately when there are two flashing LED
SIM: Simultaneous flashing when there are two flashing LED

Check code			Display of receiving unit				Typical fault site	Description of error
TCC-LINK central control or main remote controller display	Outdoor 7-segment display		Indicator light block					
		Sub-code	Operation ⏻	Timer ◷	Ready ☀	Flash		
E03	—	—	◎	●	●		Indoor-remote controller periodic communication erro	Communication from remote controller or network adaptor has been lost (so has central control communication).
E04	—	—	●	●	◎		Indoor-outdoor periodic communication error	Signals are not being received from outdoor unit.
E08	E08	Duplicated indoor address	◎	●	●		Duplicated indoor address	Indoor unit detects address identical to its own.
E10	—	—	◎	●	●		Indoor inter-MCU communication error	MCU communication between main controller and motor microcontroller is faulty.
E18	—	—	◎	●	●		Error in periodic communication between indoor header and follower unit	Periodic communication between indoor header and follower units cannot be maintained.
F01	—	—	◎	◎	●	ALT	Indoor heat exchanger temperature sensor (TCJ) error	Heat exchanger temperature sensor (TCJ) has been open / shortcircuited.
F02	—	—	◎	◎	●	ALT	Indoor heat exchanger temperature sensor (TC2) error	Heat exchanger temperature sensor (TC2) has been open / shortcircuited.
F03	—	—	◎	◎	●	ALT	Indoor heat exchanger temperature sensor (TC1) error	Heat exchanger temperature sensor (TC1) has been open / shortcircuited.
F10	—	—	◎	◎	●	ALT	Ambient temperature sensor (TA) error	Ambient temperature sensor (TA) has been open / short-circuited.
F11	—	—	◎	◎	●	ALT	Discharge temperature sensor (TF) error	Discharge temperature sensor (TF) has been open / shortcircuited.
F29	—	—	◎	◎	●	SIM	P.C. board or other indoor error	Indoor EEPROM is abnormal (some other error may be detected).
L03	—	—	◎	●	◎	SIM	Duplicated indoor group header unit	There is more than one header unit in group.
L07	—	—	◎	●	◎	SIM	Connection of group control cable to stand-alone indoor unit	There is at least one stand-alone indoor unit to which group control cable is connected.
L08	L08	—	◎	●	◎	SIM	Indoor group address not set	Address setting has not been performed for one or more indoor units (also detected at outdoor unit end).
L09	—	—	◎	●	◎	SIM	Indoor capacity not set	Capacity setting has not been performed for indoor unit.
L20	—	—	◎	○	◎	SIM	Duplicated central control address	There is duplication in central control address setting.
L30	L30	Detected indoor unit No.	◎	○	◎	SIM	Indoor external error input (interlock)	Unit shutdown has been caused by external error input (CN80).
P01	—	—	●	◎	◎	ALT	Indoor AC fan error	Indoor AC fan error is detected (activation of fan motor thermal relay).
P10	P10	Detected indoor unit No.	●	◎	◎	ALT	Indoor overflow error	Float switch has been activated.
P12	—	—	●	◎	◎	ALT	Indoor DC fan error	Indoor DC fan error (e.g. overcurrent or lock-up) is detected.
P31	—	—	◎	●	◎	ALT	Other indoor unit error	Follower unit cannot be operated due to header unit alarm (E03 / L03 / L07 / L08).

(Error detected by main remote controller)

Check code			Display of receiving unit				Typical fault site	Description of error
Main remote controller	Outdoor 7-segment display		Indicator light block					
		Sub-code	Operation	Timer	Ready	Flash		
E01	—	—	◎	●	●		No master remote controller, faulty remote controller communication (reception)	Signals cannot be received from indoor unit; master remote controller has not been set (including two remote controller control).
E02	—	—	◎	●	●		Faulty remote controller communication (transmission)	Signals cannot be transmitted to indoor unit.
E02	—	—	◎	●	●		Duplicated master remote controller	Both remote controllers have been set as master remote controller in two remote controller control (alarm and shutdown for header unit and continued operation for follower unit)

(Error detected by central control device)

Check code			Display of receiving unit				Typical fault site	Description of error
TCC-LINK central control	Outdoor 7-segment display		Indicator light block					
		Sub-code	Operation	Timer	Ready	Flash		
C05	—	—	No indication (when main remote controller also in use)				Faulty central control communication (transmission)	Central control device is unable to transmit signal due to duplication of central control device (AI-NET).
C06	—	—					Faulty central control communication (reception)	Central control device is unable to receive signal.
—	—	—					Multiple network adapters	Multiple network adapters are connected to remote controller communication line (AI-NET).
C12	—	—	—				Blanket alarm for general-purpose device control interface	Device connected to general-purpose device control interface for TCC-LINK / AI-NET is faulty.
P30	—	—	As per alarm unit (see above)				Group control follower unit error	Group follower unit is faulty (unit No. and above detail [***] displayed on main remote controller)

Note: The same error, e.g. a communication error, may result in the display of different check codes depending on the device that detects it. Moreover, check codes detected by the main remote controller / central control device do not necessarily have a direct impact on air conditioner operation.

List of check codes (outdoor unit)

(Errors detected by SMMS outdoor interface - typical examples)

IPDU: Intelligent Power Drive Unit (Inverter P.C. board)
○ :Lighting, ◎ : Flashing, ● : Goes off
ALT.: Flashing is alternately when there are two flashing LED
SIM: Simultaneous flashing when there are two flashing LED

Check code			Display of receiving unit				Typical fault site	Description of error
Outdoor 7-segment display		TCC-LINK central control or main remote controller display	Indicator light block					
	Sub-code		Operation ⏻	Timer ◷	Ready ☼	Flash		
E06	Number of indoor units from which signal is received normally	E06	●	●	◎		Dropping out of indoor unit	Indoor unit initially communicating normally fails to return signal (reduction in number of indoor units connected).
E07	–	(E04)	●	●	◎		Indoor-outdoor communication circuit error	Signal cannot be transmitted to indoor units (indoor units left without communication from outdoor unit).
E08	Duplicated indoor address	(E08)	◎	●	●		Duplicated indoor address	More than one indoor unit is assigned same address (also detected at indoor unit end).
E12	01: Indoor-outdoor communication 02: Outdoor-outdoor communication	E12	◎	●	●		Automatic address starting error	Indoor automatic address setting is started while automatic address setting for equipment in other refrigerant line is in progress. Outdoor automatic address setting is started while automatic address setting for indoor units is in progress.
E15	–	E15	●	●	◎		Indoor unit not found during automatic address setting	Indoor unit fails to communicate while automatic address setting for indoor units is in progress.
E16	00: Overloading 01: Number of units connected	E16	●	●	◎		Too many indoor units connected / overloading	Combined capacity of indoor units is too large (more than 135 % of combined capacity of outdoor units). ✻
E19	00: No header unit 02: Two or more header units	E19	●	●	◎		Error in number of outdoor header units	There is no or more than one outdoor header unit in one refrigerant line.
E20	01: Connection of outdoor unit from other refrigerant line 02: Connection of indoor unit from other refrigerant line	E20	●	●	◎		Connection to other refrigerant line found during automatic address setting	Indoor unit from other refrigerant line is detected while indoor automatic address setting is in progress.
E23	–	E23	●	●	◎		Outdoor-outdoor communication transmission error	Signal cannot be transmitted to other outdoor units.
E25	–	E25	●	●	◎		Duplicated follower outdoor address	There is duplication in outdoor addresses set manually.
E26	Address of outdoor unit from which signal is not received normally	E26	●	●	◎		Dropping out of outdoor unit	Follower outdoor unit initially communicating normally fails to do so (reduction in number of follower outdoor units connected).
E28	Detected outdoor unit No.	E28	●	●	◎		Outdoor follower unit error	Outdoor header unit detects fault relating to follower outdoor unit (detail displayed on follower outdoor unit).
E31		E31	●	●	◎		IPDU communication error	There is no communication between IPDUs (P.C. boards) in inverter box.

	A3-IPDU 1	A3-IPDU 2	A3-IPDU 3	Fan IPDU		A3-IPDU 1	A3-IPDU 2	A3-IPDU 3	Fan IPDU
01	O				0A		O		O
02		O			0B	O	O		O
03	O	O			0C			O	O
04			O		0D	O		O	O
05	O		O		0E		O	O	O
06		O	O		0F	O	O	O	O
07	O	O	O		Circle (O): Faulty IPDU				
08				O					
09	O			O					

F04	–	F04	◎	◎	○	ALT	Outdoor discharge temperature sensor (TD1) error	Outdoor discharge temperature sensor (TD1) has been open / short-circuited.
F05	–	F05	◎	◎	○	ALT	Outdoor discharge temperature sensor (TD2) error	Outdoor discharge temperature sensor (TD2) has been open / short-circuited.
F06	01: TE1 02: TE2	F06	◎	◎	○	ALT	Outdoor heat exchanger temperature sensor (TE1, TE2) error	Outdoor heat exchanger temperature sensors (TE1, TE2) have been open / short-circuited.
F07	–	F07	◎	◎	○	ALT	Outdoor liquid temperature sensor (TL) error	Outdoor liquid temperature sensor (TL) has been open / short-circuited.
F08	–	F08	◎	◎	○	ALT	Outdoor outside air temperature sensor (TO) error	Outdoor outside air temperature sensor (TO) has been open / short-circuited.
F11	–	F11						

✻ When the indoor unit connection capacity is calculated, AP005 is calculated as 0.8 HP.

Check code			Display of receiving unit				Typical fault site	Description of error
Outdoor 7-segment display		TCC-LINK central control or main remote controller display	Indicator light block					
	Sub-code		Operation ⏻	Timer ◷	Ready ☼	Flash		
F12	–	F12	◎	◎	○	ALT	Outdoor suction temperature sensor (TS1) error	Outdoor suction temperature sensor (TS1) has been open / short-circuited.
F13	01: Compressor 1 02: Compressor 2 03: Compressor 3	F13	◎	◎	○	ALT	Outdoor IGBT built-in temperature sensor (TH) error	Open-circuit or short-circuit of the outdoor IGBT built-in temperature sensor (TH) was detected.
F15	–	F15	◎	◎	○	ALT	Outdoor temperature sensor (TE1, TL) wiring error	Wiring error in outdoor temperature sensors (TE1, TL) has been detected.
F16	–	F16	◎	◎	○	ALT	Outdoor pressure sensor (Pd, Ps) wiring error	Wiring error in outdoor pressure sensors (Pd, Ps) has been detected.
F22	–	F22	◎	◎	○	ALT	Outdoor discharge temperature sensor (TD3) error	Outdoor discharge temperature sensor (TD3) has been open / short-circuited.
F23	–	F23	◎	◎	○	ALT	Low pressure sensor (Ps) error	Output voltage of low pressure sensor (Ps) is zero.
F24	–	F24	◎	◎	○	ALT	High pressure sensor (Pd) error	Output voltage of high pressure sensor (Pd) is zero or provides abnormal readings when compressors have been turned off.
F31	–	F31	◎	◎	○	SIM	Outdoor EEPROM error	Outdoor EEPROM is faulty (alarm and shutdown for header unit and continued operation for follower unit)
H01	01: Compressor 1 02: Compressor 2 03: Compressor 3	H01	●	◎	●		Compressor breakdown	Overcurrent of the inverter current (Idc) detection circuit was detected.
H02	01: Compressor 1 02: Compressor 2 03: Compressor 3	H02	●	◎	●		Compressor error (Lock)	Compressor lock was detected.
H03	01: Compressor 1 02: Compressor 2 03: Compressor 3	H03	●	◎	●		Current detection circuit error	Current error was detected while the compressor was stopped.
H04		H05	●	◎	●		Compressor 1 case thermo activation	Compressor 1 case thermo was activated for protection.
H05	–	H05	●	◎	●		Outdoor discharge temperature sensor (TD1) wiring error	Wiring / installation error or detachment of outdoor discharge temperature sensor (TD1) has been detected.
H06	–	H06	●	◎	●		Activation of low-pressure protection	Low pressure (Ps) sensor detects abnormally low operating pressure.
H07	–	H07	●	◎	●		Activation of low-pressure protection	Temperature sensor for oil level detection (TK1-5) detects abnormally low oil level.
H08	01: TK1 sensor error 02: TK2 sensor error 03: TK3 sensor error 04: TK4 sensor error 05: TK5 sensor error	H08	●	◎	●		Error in temperature sensor for oil level detection (TK1-5)	Temperature sensor for oil level detection (TK1-5) has been open / short-circuited.
H14	–	H14	●	◎	●		Compressor 2 case thermo activation	Compressor 2 case thermo was activated for protection.
H15	–	H15	●	◎	●		Outdoor discharge temperature sensor (TD2) wiring error	Wiring / installation error or detachment of outdoor discharge temperature sensor (TD2) has been detected.
H16	01: TK1 oil circuit error 02: TK2 oil circuit error 03: TK3 oil circuit error 04: TK4 oil circuit error 05: TK5 oil circuit error	H16	●	◎	●		Oil level detection circuit error	No temperature change is detected by temperature sensor for oil level detection (TK1-5) despite compressor having been started.
H25	–	H25	●	◎	●		Outdoor discharge temperature sensor (TD3) wiring error	Wiring / installation error or detachment of outdoor discharge temperature sensor (TD3) has been detected.
L04	–	L04	◎	○	◎	SIM	Duplicated outdoor refrigerant line address	Identical refrigerant line address has been assigned to outdoor units belonging to different refrigerant piping systems.
L06	Number of priority indoor units (check code L05 or L06 depending on individual unit)	L05	◎	●	◎	SIM	Duplicated priority indoor unit (as displayed on priority indoor unit)	More than one indoor unit has been set up as priority indoor unit.
		L06	◎	●	◎	SIM	Duplicated priority indoor unit (as displayed on indoor unit other than priority indoor unit)	More than one indoor unit has been set up as priority indoor unit.

Check code			Display of receiving unit				Typical fault site	Description of error
Outdoor 7-segment display		TCC-LINK central control or main remote controller display	Indicator light block					
	Sub-code		Operation ⏻	Timer ◷	Ready ☼	Flash		
L08	–	(L08)	◎	●	◎	SIM	SIM Indoor group address not set	Address setting has not been performed for one or more indoor units (also detected at indoor end).
L10	–	L10	◎	○	◎	SIM	Outdoor capacity not set	Outdoor unit capacity has not been set (after P.C. board replacement).
L17	–	L17	◎	○	◎	SIM	Outdoor model incompatibility error	Old model outdoor unit (prior to 3 series) has been connected.
L18	–	L18	◎	○	◎	SIM	FS (Flow Selector) unit error	Cooling / heating cycle error resulting from piping error is detected.
L28		L28	◎	○	◎	SIM	Too many outdoor units connected	More than four outdoor units have been connected.
L29	SMMS (Series 1) 01: A3-IPDU1 error 02: A3-IPDU2 error 03: A3-IPDU1/A3-IPDU2 error 04: Fan IPDU error 05: A3-IPDU1 + Fan IPDU error 06: A3-IPDU2 + Fan IPDU error 07: All IPDU error SMMS-i (Series 4) (A3-IPDU 1, 2, 3; Fan IPDU) 01: O 02: O 03: O O 04: O 05: O O 06: O O 07: O O O 08: O 09: O O 0A: O 0B: O O 0C: O O 0D: O O 0E: O O O 0F: O O O O Circle (O): Faulty IPDU	L29	◎	○	◎	SIM	Error in number of IPDUs	There are insufficient number of IPDUs (P.C. boards) in inverter box.
L30	Detected indoor unit No.	(L30)	◎	○	◎	SIM	Indoor external error input (interlock)	Indoor unit has been shut down for external error input in one refrigerant line (detected by indoor unit).
P03	–		◎	●	◎	ALT	Outdoor discharge (TD1) temperature error	Outdoor discharge temperature sensor (TD1) has detected abnormally high temperature.
P04	P0301: Compressor 1 02: Compressor 2 03: Compressor 3	P04	◎	●	◎	ALT	High-pressure SW activation	High-pressure SW was activated.
P05	00: Open phase detected 01: Compressor 1 02: Compressor 2 03: Compressor 3	P05	◎	●	◎	ALT	Open phase / power failure Inverter DC voltage (Vdc) error MG-CTT error	Open phase is detected when power is turned on. Inverter DC voltage is too high (overvoltage) or too low (undervoltage).
P07	01: Compressor 1 02: Compressor 2 03: Compressor 3	P07	◎	●	◎	ALT	Heat sink overheating error	Temperature sensor built into IGBT (TH) detects overheating.
P10	Indoor unit No. detected	(P10)	●	◎	◎	ALT	Indoor unit overflow	Indoor unit has been shutdown in one refrigerant line due to detection of overflow (detected by indoor unit).
P13	–	P13	●	◎	◎	ALT	Outdoor liquid backflow detection error	State of refrigerant cycle circuit indicates liquid backflow operation.
P15	01: TS condition 02: TD condition	P15	◎	●	◎	ALT	Gas leak detection	Outdoor suction temperature sensor (TS1) detects sustained and repeated high temperatures that exceed standard value.
P17	–	P17	◎	●	◎	ALT	Outdoor discharge (TD2) temperature error	Outdoor discharge temperature sensor (TD2) detects abnormally high temperature.
P18	–	P18	◎	●	◎	ALT	Outdoor discharge (TD3) temperature error	Outdoor discharge temperature sensor (TD3) detects abnormally high temperature.
P19	Outdoor unit No. detected	P19	◎	●	◎	ALT	4-way valve reversing error	Abnormality in refrigerating cycle is detected during heating operation.
P20	–	P20	◎	●	◎	ALT	Activation of high-pressure protection	High pressure (Pd) sensor detects high pressure that exceeds standard value.

MG-CTT: Magnet contactor

(Errors detected by IPDU featuring in SMMS standard outdoor unit - typical examples)

Check code			Display of receiving unit				Typical fault site	Description of error
Outdoor 7-segment display		TCC-LINK central control or main remote controller display	Indicator light block					
	Sub-code		Operation	Timer	Ready	Flash		
F13	01: Compressor 1 02: Compressor 2 03: Compressor 3	F13	◎	◎	○	ALT	Error in temperature sensor built into indoor IGBT (TH)	Temperature sensor built into indoor IGBT (TH) has been open / short-circuited.
H01	01: Compressor 1 02: Compressor 2 03: Compressor 3	H01	●	◎	●		Compressor breakdown	Inverter current (Idc) detection circuit detects overcurrent.
H02	01: Compressor 1 02: Compressor 2 03: Compressor 3	H02	●	◎	●		Compressor error (lockup)	Compressor lockup is detected
H03	01: Compressor 1 02: Compressor 2 03: Compressor 3	H03	●	◎	●		Current detection circuit error	Abnormal current is detected while inverter compressor is turned off.
P04	01: Compressor 1 02: Compressor 2 03: Compressor 3	P04	◎	●	◎	ALT	Activation of high-pressure SW	High-pressure SW is activated.
P07		P07	◎	●	◎	ALT	Heat sink overheating error	Temperature sensor built into IGBT (TH) detects overheating.
P20		P20	◎	●	◎	ALT	High-pressure protection activation	High-pressure (Pd) sensor detected a value over the criteria.
P22	SMMS (Series 1) 04: Rotation difference error 06: Maximum rotation exceeded 08: Out of step 0A: Idc activation 0C: Fan lock 0d: Lock 0E: Sync error 0F: Control error SMMS-i (Series 4) 0..: IGBT circuit 1..: Position detection circuit error 3..: Motor lockup error 4..: Motor current detection C..: TH sensor error D..: TH sensor error E..: Inverter DC voltage error (outdoor fan) Note: Although letters 0 to F appear at locations indicated by "*", please ignore them.	P22	◎	●	◎	ALT	Outdoor fan IPDU error	Outdoor fan IPDU detects error.
P26	01: Compressor 1 02: Compressor 2 03: Compressor 3	P26	◎	●	◎	ALT	Activation of G-Tr (IGBT) short-circuit protection	Short-circuit protection for compressor motor driver circuit components is activated (momentary overcurrent).
P29	01: Compressor 1 02: Compressor 2 03: Compressor 3	P29	◎	●	◎	ALT	Compressor position detection circuit error	Compressor motor position detection error is detected.

Note: The above check codes are examples only, and different check codes may be displayed depending on the outdoor unit configuration (e.g. a Super heat recovery multi system). For details, see the service manual for the outdoor unit.

6-3. Troubleshooting based on information displayed on remote controller

Using main remote controller (RBC-AMT32E)

(1) Checking and testing

When a fault occurs to an air conditioner, a check code and indoor unit No. are displayed on the display window of the remote controller.

Check codes are only displayed while the air conditioner is in operation.

If the display has already disappeared, access error history by following the procedure described below.

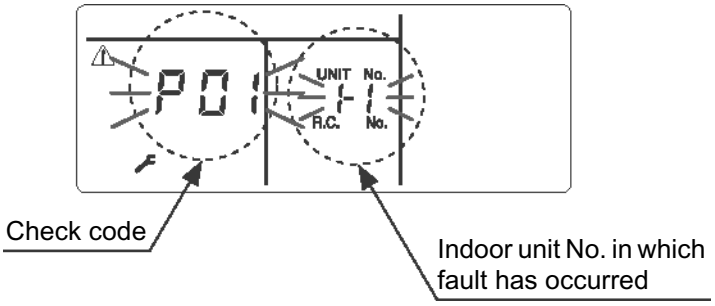

(2) Error history

The error history access procedure is described below (up to four errors stored in memory).

Error history can be accessed regardless of whether the air conditioner is in operation or shut down.

<Procedure> To be performed when system at rest

1 **Invoke the SERVICE CHECK mode by pressing the TEST + SET buttons simultaneously and holding for at least 4 seconds.**

The letters " SERVICE CHECK" light up, and the check code "01" is displayed, indicating the error history. This is accompanied by the indoor unit No. to which the error history is related and a check code.

2 **To check other error history items, press the TEMP. button to select another check code.**

Check code "01" (latest) → Check code "04" (oldest)

Note: Error history contains four items.

3 **When the TEST button is pushed, normal display is restored.**

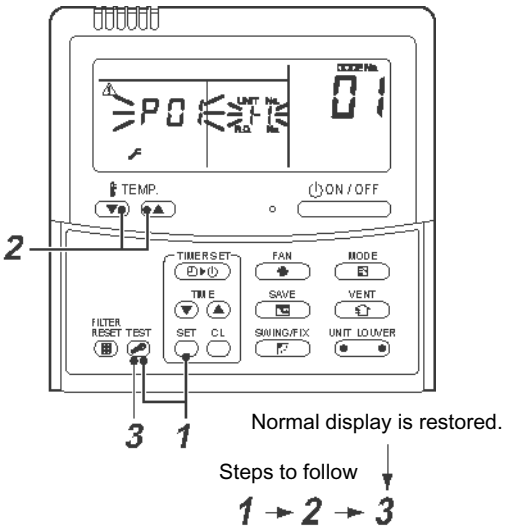

REQUIREMENT

Do not push the CL button as it would erase the whole error history of the indoor unit.

How to read displayed information

<7-segment display symbols>

<Corresponding alphanumerical letters>

0 1 2 3 4 5 6 7 8 9 A b C d E F H J L P

Using TCC-LINK central control remote controller (TCB-SC642TLE2)

(1) Checking and testing

When a fault occurs to an air conditioner, a check code and indoor unit No. are displayed on the display window of the remote controller. Check codes are only displayed while the air conditioner is in operation.
If the display has already disappeared, access error history by following the procedure described below.

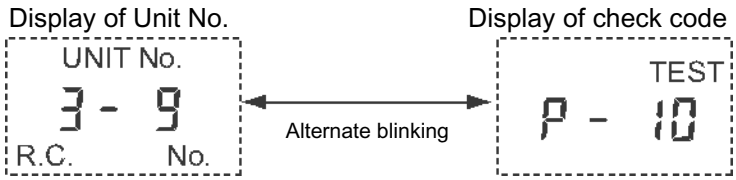

(2) Error history

The error history access procedure is described below (up to four errors stored in memory).
Error history can be accessed regardless of whether the air conditioner is in operation or shut down.

1 **Push the TEST + SET buttons simultaneously and hold for at least 4 seconds.**

2 **The letters " SERVICE CHECK" light up, and the check code "01" is displayed.**

3 **When a group No. is selected (blinking), if there is an error history, the UNIT No. and the latest error history information are displayed alternately.**
*During this procedure, the temperature setting feature is unavailable.

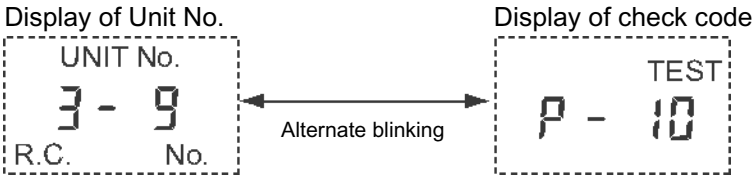

4 **To check other error history items, push the TEMP. button to select another check code (01-04.).**

5 **To check check code relating to another group, push (ZONE) and (GROUP) ◁ ▷ buttons to select a group No.**
Do not push the CL button as it would erase the whole error history of the selected group.

6 **To finish off the service check, push the TEST button.**

Using indoor unit indicators (receiving unit light block) (wireless type)

To identify the check code, check the 7-segment display on the header unit. To check for check codes not displayed on the 7-segment display, consult the “List of Check Codes (Indoor Unit)” in “6-2. Troubleshooting method”.

●: Goes off ○: Lighting ☼: Blinking (0.5 seconds)

Light block	Check code	Cause of fault		
Operation ● Timer ● Ready ● All lights out	–	Power turned off or error in wiring between receiving and indoor units		
Operation ☼ Timer ● Ready ● Blinking	E01	Faulty reception	Receiving unit	Error or poor contact in wiring between receiving and indoor units
	E02	Faulty transmission		
	E03	Loss of communication		
	E08	Duplicated indoor unit No. (address)		Setting error
	E09	Duplicated master remote controller		
	E10	Indoor unit inter-MCU communication error		
	E12	Automatic address starting error		
	E18	Error or poor contact in wiring between indoor units, indoor power turned off		
Operation ● Timer ● Ready ☼ Blinking	E04	Error or poor contact in wiring between indoor and outdoor units (loss of indoor-outdoor communication)		
	E06	Faulty reception in indoor-outdoor communication (dropping out of indoor unit)		
	E07	Faulty transmission in indoor-outdoor communication		
	E15	Indoor unit not found during automatic address setting		
	E16	Too many indoor units connected / overloading		
	E19	Error in number of outdoor header units		
	E20	Detection of refrigerant piping communication error during automatic address setting		
	E23	Faulty transmission in outdoor-outdoor communication		
	E25	Duplicated follower outdoor address		
	E26	Faulty reception in outdoor-outdoor communication, dropping out of outdoor unit		
	E28	Outdoor follower unit error		
	E31	IPDU communication error		
Operation ● Timer ☼ Ready ☼ Alternate blinking	P01	Indoor AC fan error		
	P10	Indoor overflow error		
	P12	Indoor DC fan error		
	P13	Outdoor liquid backflow detection error		
Operation ☼ Timer ● Ready ☼ Alternate blinking	P03	Outdoor discharge (TD1) temperature error		
	P04	Activation of outdoor high-pressure SW		
	P05	Open phase / power failure Inverter DC voltage (Vdc) error MG-CTT error		
	P07	Outdoor heat sink overheating error - Poor cooling of electrical component (IGBT) of outdoor unit		
	P15	Gas leak detection - insufficient refrigerant charging		
	P17	Outdoor discharge (TD2) temperature error		
	P18	Outdoor discharge (TD3) temperature error		
	P19	Outdoor 4-way valve reversing error		
	P20	Activation of high-pressure protection		
	P22	Outdoor fan IPDU error		
	P26	Outdoor G-Tr short-circuit error		
	P29	Compressor position detection circuit error		
	P31	Shutdown of other indoor unit in group due to fault (group follower unit error)		

MG-CTT: Magnet contactor

Light block	Check code	Cause of fault	
Operation Timer Ready Alternate blinking	F01	Heat exchanger temperature sensor (TCJ) error	Indoor unit temperature sensor errors
	F02	Heat exchanger temperature sensor (TC2) error	
	F03	Heat exchanger temperature sensor (TC1) error	
	F10	Ambient temperature sensor (TA) error	
	F11	Discharge temperature sensor (TF) error	
Operation Timer Ready Alternate blinking	F04	Discharge temperature sensor (TD1) error	Outdoor unit temperature sensor errors
	F05	Discharge temperature sensor (TD2) error	
	F06	Heat exchanger temperature sensor (TE1, TE2) error	
	F07	Liquid temperature sensor (TL) error	
	F08	Outside air temperature sensor (TO) error	
	F12	Suction temperature sensor (TS1) error	
	F13	Heat sink sensor (TH) error	
	F15	Wiring error in heat exchanger sensor (TE1) and liquid temperature sensor (TL) Outdoor unit temperature sensor wiring / installation error	
	F16	Wiring error in outdoor high pressure sensor (Pd) and low pressure sensor (Ps) Outdoor pressure sensor wiring error	
	F22	Outdoor discharge temperature sensor (TD3) error	Outdoor unit pressure sensor errors
	F23	Low pressure sensor (Ps) error	
	F24	High pressure sensor (Pd) error	
Operation Timer Ready Synchronized blinking	F29	Fault in indoor EEPROM	
Operation Timer Ready Blinking	H01	Compressor breakdown	Outdoor unit compressor-related errors
	H02	Compressor lockup	
	H03	Current detection circuit error	
	H05	Wiring / installation error or detachment of outdoor discharge temperature sensor (TD1)	
	H06	Abnormal drop in low-pressure sensor (Ps) reading	Protective shutdown of outdoor unit
	H07	Abnormal drop in oil level	
	H08	Error in temperature sensor for oil level detection circuit (TK1, TK2, TK3, TK4 or TK5)	
	H15	Wiring / installation error or detachment of outdoor discharge temperature sensor (TD2)	
	H16	Oil level detection circuit error - Error in outdoor unit TK1, TK2, TK3, TK4 or TK5 circuit	
	H25	Wiring / installation error or detachment of outdoor discharge temperature sensor (TD3)	
Operation Timer Ready Synchronized blinking	L03	Duplicated indoor group header unit	
	L05	Duplicated priority indoor unit (as displayed on priority indoor unit)	
	L06	Duplicated priority indoor unit (as displayed on indoor unit other than priority indoor unit)	
	L07	Connection of group control cable to stand-alone indoor unit	
	L08	Indoor group address not set	
	L09	Indoor capacity not set	
Operation Timer Ready Synchronized blinking	L04	Duplicated outdoor refrigerant line address	
	L10	Outdoor capacity not set	
	L17	Outdoor model incompatibility error	
	L18	Flow selector units error	
	L20	Duplicated central control address	
	L28	Too many outdoor units connected	
	L29	Error in number of IPDUs	
	L30	Indoor external interlock error	

Light block	Check code	Cause of fault
Operation Timer Ready Synchronized blinking	F31	Outdoor EEPROM error

Other (indications not involving check code)

Light block	Check code	Cause of fault
Operation Timer Ready Synchronized blinking	–	Test run in progress
Operation Timer Ready Alternate blinking	–	Setting incompatibility (automatic cooling / heating setting for model incapable of it and heating setting for cooling-only model)

6-4. Check codes displayed on remote controller and SMMS outdoor unit (7-segment display on I/F board) and locations to be checked

For other types of outdoor units, refer to their own service manuals.

Check code				Location of detection	Description	System status	Error detection condition(s)	Check items (locations)
Main remote controller	Outdoor 7-segment display		AI-NET central control remote controller					
	Check code	Sub-code						
E01	–	–	–	Remote controller	Indoor-remote controller communication error (detected at remote controller end)	Stop of corresponding unit	Communication between indoor P.C. board and remote controller is disrupted.	• Check remote controller inter-unit tie cable (A / B). • Check for broken wire or connector bad contact. • Check indoor power supply. • Check for defect in indoor P.C. board. • Check remote controller address settings (when two remote controllers are in use). • Check remote controller P.C. board.
E02	–	–	–	Remote controller	Remote controller transmission error	Stop of corresponding unit	Signal cannot be transmitted from remote controller to indoor unit.	• Check internal transmission circuit of remote controller. --- Replace remote controller as necessary.
E03	–	–	97	Indoor unit	Indoor-remote controller communication error (detected at indoor end)	Stop of corresponding unit	There is no communication from remote controller (including wireless) or network adaptor.	• Check remote controller and network adaptor wiring.
E04	–	–	04	Indoor unit	Indoor-outdoor communication circuit error (detected at indoor end)	Stop of corresponding unit	Indoor unit is not receiving signal from outdoor unit.	• Check order in which power was turned on for indoor and outdoor units. • Check indoor address setting. • Check indoor-outdoor tie cable. • Check outdoor termination resistance setting (SW30, Bit 2).
E06	E06	No. of indoor units from which signal is received normally	04	I/F	Dropping out of indoor unit	All stop	Indoor unit initially communicating normally fails to return signal for specified length of time.	• Check power supply to indoor unit. (Is power turned on?) • Check connection of indoor-outdoor communication cable. • Check connection of communication connectors on indoor P.C. board. • Check connection of communication connectors on outdoor P.C. board. • Check for defect in indoor P.C. board. • Check for defect in outdoor P.C. board (I/F).
–	E07	–	–	I/F	Indoor-outdoor communication circuit error (detected at outdoor end)	All stop	Signal cannot be transmitted from outdoor to indoor units for 30 seconds continuously.	• Check outdoor termination resistance setting (SW30, Bit 2). • Check connection of indoor-outdoor communication circuit.

Check code				Location of detection	Description	System status	Error detection condition(s)	Check items (locations)
Main remote controller	Outdoor 7-segment display		AI-NET central control remote controller					
	Check code	Sub-code						
E08	E08	Duplicated indoor address	96	Indoor unit I/F	Duplicated indoor address	All stop	More than one indoor unit is assigned same address.	• Check indoor addresses. • Check for any change made to remote controller connection (group / individual) since indoor address setting.
E09	–	–	99	Remote controller	Duplicated master remote controller	Stop of corresponding unit	In two remote controller configuration (including wireless), both controllers are set up as master. (Header indoor unit is shut down with alarm, while follower indoor units continue operating.)	• Check remote controller settings. • Check remote controller P.C. boards.
E10	–	–	CF	Indoor unit	Indoor inter-MCU communication error	Stop of corresponding unit	Communication cannot be established / maintained upon turning on of power or during communication.	• Check for defect in indoor P.C. board
E12	E12	01: Indoor-outdoor communication 02: Outdoor-outdoor communication	42	I/F	Automatic address starting error	All stop	• Indoor automatic address setting is started while automatic address setting for equipment in other refrigerant line is in progress. • Outdoor automatic address setting is started while automatic address setting for indoor units is in progress.	• Perform automatic address setting again after disconnecting communication cable to that refrigerant line.
E15	E15	–	42	I/F	Indoor unit not found during automatic address setting	All stop	Indoor unit cannot be detected after indoor automatic address setting is started.	• Check connection of indoor-outdoor communication line. • Check for error in indoor power supply system. • Check for noise from other devices. • Check for power failure. • Check for defect in indoor P.C. board.
E16	E16	00: Overloading 01-: No. of units connected	89	I/F	Too many indoor units connected	All stop	• Combined capacity of indoor units exceeds 135 % of combined capacity of outdoor units. ✻ **Note:** **If this code comes up after backup setting for outdoor unit failure is performed, perform "No overloading detected" setting.** <"No overloading detected" setting method> Turn on SW09/Bit 2 on I/F P.C. board of outdoor header unit. • More than 48 indoor units are connected.	• Check capacities of indoor units connected. • Check combined HP capacities of indoor units. • Check HP capacity settings of outdoor units. • Check No. of indoor units connected. • Check for defect in outdoor P.C. board (I/F).

✻ When the indoor unit connection capacity is calculated, AP005 is calculated as 0.8 HP.

Check code				Location of detection	Description	System status	Error detection condition(s)	Check items (locations)
Main remote controller	Outdoor 7-segment display		AI-NET central control remote controller					
	Check code	Sub-code						
E18	–	–	97·99	Indoor unit	Error in communication between indoor header and follower units	Stop of corresponding unit	Periodic communication between indoor header and follower units cannot be maintained.	• Check remote controller wiring. • Check indoor power supply wiring. • Check P.C. boards of indoor units.
E19	E19	00: No header unit 02: Two or more header units	96	I/F	Error in number of outdoor header units	All stop	• There is more than one outdoor header unit in one line. • There is no outdoor header unit in one line.	Outdoor header unit is outdoor unit to which indoor-outdoor tie cable (U1,U2) is connected. • Check connection of indoor-outdoor communication line. • Check for defect in outdoor P.C. board (I/F).
E20	E20	01: Connection of outdoor unit from other line 02: Connection of indoor unit from other line	42	I/F	Connection to other line found during automatic address setting	All stop	Equipment from other line is found to have been connected when indoor automatic address setting is in progress.	Disconnect inter-line tie cable in accordance with automatic address setting method explained in “Address setting” section.
E23	E23	–	15	I/F	Outdoor-outdoor communication transmission error	All stop	Signal cannot be transmitted to other outdoor units for at least 30 seconds continuously.	• Check power supply to outdoor units. (Is power turned on?) • Check connection of tie cables between outdoor units for bad contact or broken wire. • Check communication connectors on outdoor P.C. boards. • Check for defect in outdoor P.C. board (I/F). • Check termination resistance setting for communication between outdoor units.
E25	E25	–	15	I/F	Duplicated follower outdoor address	All stop	There is duplication in outdoor addresses set manually.	**Note:** **Do not set outdoor addresses manually.**
E26	E26	Address of outdoor unit from which signal is not received normally	15	I/F	Dropping out of outdoor unit	All stop	Outdoor unit initially communicating normally fails to return signal for specified length of time.	• Backup setting is being used for outdoor units. • Check power supply to outdoor unit. (Is power turned on?) • Check connection of tie cables between outdoor units for bad contact or broken wire. • Check communication connectors on outdoor P.C. boards. • Check for defect in outdoor P.C. board (I/F).
E28	E28	Detected outdoor unit No.	d2	I/F	Outdoor follower unit error	All stop	Outdoor header unit receives error code from outdoor follower unit.	• Check check code displayed on outdoor follower unit. <Convenient functions> If SW04 is pressed and held for at least 1 second while [E28] is displayed on the 7-segmentdisplay of outdoor header unit, the fan of the outdoor unit that has been shut down due to an error comes on. If SW04 and SW05 are pressed simultaneously, the fans of normal outdoor units come on. To stop the fan or fans, press SW05 on its own.

<table>
<tr><th colspan="4">Check code</th><th rowspan="3">Location of detection</th><th rowspan="3">Description</th><th rowspan="3">System status</th><th rowspan="3">Error detection condition(s)</th><th rowspan="3">Check items (locations)</th></tr>
<tr><th rowspan="2">Main remote controller</th><th colspan="2">Outdoor 7-segment display</th><th rowspan="2">AI-NET central control remote controller</th></tr>
<tr><th>Check code</th><th>Sub-code</th></tr>
<tr><td>E31</td><td>E31</td><td>SMMS (Series 1)
01: A3-IPDU1 error
02: A3-IPDU2 error
03: A3-IPDU1/A3-IPDU2 error
04: Fan IPDU error
05: A3-IPDU1 + Fan IPDU error
06: A3-IPDU2 + Fan IPDU error
07: All IPDU error or Communication error between IPDU and I/F circuit board or Outdoor I/F circuit board error

SMMS-i (Series 4)
<table>
<tr><th></th><th colspan="3">A3-IPDU</th><th>Fan</th></tr>
<tr><th></th><th>1</th><th>2</th><th>3</th><th>IPDU</th></tr>
<tr><td>01</td><td>O</td><td></td><td></td><td></td></tr>
<tr><td>02</td><td></td><td>O</td><td></td><td></td></tr>
<tr><td>03</td><td>O</td><td>O</td><td></td><td></td></tr>
<tr><td>04</td><td></td><td></td><td>O</td><td></td></tr>
<tr><td>05</td><td>O</td><td></td><td>O</td><td></td></tr>
<tr><td>06</td><td></td><td>O</td><td>O</td><td></td></tr>
<tr><td>07</td><td>O</td><td>O</td><td>O</td><td></td></tr>
<tr><td>08</td><td></td><td></td><td></td><td>O</td></tr>
<tr><td>09</td><td>O</td><td></td><td></td><td>O</td></tr>
<tr><td>0A</td><td></td><td>O</td><td></td><td>O</td></tr>
<tr><td>0B</td><td>O</td><td>O</td><td></td><td>O</td></tr>
<tr><td>0C</td><td></td><td></td><td>O</td><td>O</td></tr>
<tr><td>0D</td><td>O</td><td></td><td>O</td><td>O</td></tr>
<tr><td>0E</td><td></td><td>O</td><td>O</td><td>O</td></tr>
<tr><td>0F</td><td>O</td><td>O</td><td>O</td><td>O</td></tr>
</table>
Symbol O signifies site of IPDU error.</td><td>CF</td><td>I/F</td><td>IPDU communication error</td><td>All stop</td><td>Communication is disrupted between IPDUs (P.C. boards) in inverter box.</td><td>• Check wiring and connectors involved in communication between IPDU-I/F P.C. board for bad contact or broken wire.
• Check for defect in outdoor P.C. board (I/F, A3-IPDU or Fan IPDU).
• Check for external noise.</td></tr>
<tr><td>F01</td><td>–</td><td>–</td><td>0F</td><td>Indoor unit</td><td>Indoor TCJ sensor error</td><td>Stop of corresponding unit</td><td>Sensor resistance is infinity or zero (open / short circuit).</td><td>• Check connection of TCJ sensor connector and wiring.
• Check resistance characteristics of TCJ sensor.
• Check for defect in indoor P.C. board.</td></tr>
<tr><td>F02</td><td>–</td><td>–</td><td>0d</td><td>Indoor unit</td><td>Indoor TC2 sensor error</td><td>Stop of corresponding unit</td><td>Sensor resistance is infinity or zero (open / short circuit).</td><td>• Check connection of TC2 sensor connector and wiring.
• Check resistance characteristics of TC2 sensor.
• Check for defect in indoor P.C. board.</td></tr>
<tr><td>F03</td><td>–</td><td>–</td><td>93</td><td>Indoor unit</td><td>Indoor TC1 sensor error</td><td>Stop of corresponding unit</td><td>Sensor resistance is infinity or zero (open / short circuit).</td><td>• Check connection of TC1 sensor connector and wiring.
• Check resistance characteristics of TC1 sensor.
• Check for defect in indoor P.C. board.</td></tr>
<tr><td>F04</td><td>F04</td><td>–</td><td>19</td><td>I/F</td><td>TD1 sensor error</td><td>All stop</td><td>Sensor resistance is infinity or zero (open / short circuit).</td><td>• Check connection of TD1 sensor connector.
• Check resistance characteristics of TD1 sensor.
• Check for defect in outdoor P.C. board (I/F).</td></tr>
<tr><td>F05</td><td>F05</td><td>–</td><td>A1</td><td>I/F</td><td>TD2 sensor error</td><td>All stop</td><td>Sensor resistance is infinity or zero (open / short circuit).</td><td>• Check connection of TD2 sensor connector.
• Check resistance characteristics of TD2 sensor.
• Check for defect in outdoor P.C. board (I/F).</td></tr>
<tr><td>F06</td><td>F06</td><td>01:
TE1 sensor error
02:
TE2 sensor error</td><td>18</td><td>I/F</td><td>TE1/TE2 sensor error</td><td>All stop</td><td>Sensor resistance is infinity or zero (open / short circuit).</td><td>• Check connection of TE1/TE2 sensor connectors.
• Check resistance characteristics of TE1/TE2 sensors.
• Check for defect in outdoor P.C. board (I/F).</td></tr>
</table>

Check code				Location of detection	Description	System status	Error detection condition(s)	Check items (locations)
Main remote controller	Outdoor 7-segment display		AI-NET central control remote controller					
	Check code	Sub-code						
F07	F07	–	18	I/F	TL sensor error	All stop	Sensor resistance is infinity or zero (open / short circuit).	• Check connection of TL sensor connector. • Check resistance characteristics of TL sensor. • Check for defect in outdoor P.C. board (I/F).
F08	F08	–	1b	I/F	TO sensor error	All stop	Sensor resistance is infinity or zero (open / short circuit).	• Check connection of TO sensor connector. • Check resistance characteristics of TO sensor. • Check for defect in outdoor P.C. board (I/F).
F10	–	–	0C	Indoor unit	Indoor TA sensor error	Stop of corresponding unit	Sensor resistance is infinity or zero (open / short circuit).	• Check connection of TA sensor connector and wiring. • Check resistance characteristics of TA sensor. • Check for defect in indoor P.C. board.
F11	–	–		Indoor unit	Indoor TF sensor error	Stop of corresponding unit	Sensor resistance is infinity or zero (open / short circuit).	• Check connection of TF sensor connector and wiring. • Check resistance characteristics of TF sensor. • Check for defect in indoor P.C. board.
F12	F12	–	A2	I/F	TS1 sensor error	All stop	Sensor resistance is infinity or zero (open / short circuit).	• Check connection of TS1 sensor connector. • Check resistance characteristics of TS1 sensor. • Check for defect in outdoor P.C. board (I/F).
F13	F13	01: Compressor 1 side 02: Compressor 2 side 03: Compressor 3 side	43	IPDU	TH sensor error	All stop	Sensor resistance is infinity or zero (open / short circuit).	• Defect in IGBT built-in temperature sensor → Replace A3-IPDU P.C. board.
F15	F15	–	18	I/F	Outdoor temperature sensor wiring error (TE1, TL)	All stop	During compressor operation in HEAT mode, TE1 continuously provides temperature reading higher than indicated by TL by at least specified margin for 3 minutes or more.	• Check installation of TE1 and TL sensors. • Check resistance characteristics of TE1 and TL sensors. • Check for outdoor P.C. board (I/F) error.
F16	F16	–	43	I/F	Outdoor pressure sensor wiring error (Pd, Ps)	All stop	Readings of high-pressure Pd sensor and low-pressure Ps sensor are switched. Output voltages of both sensors are zero.	• Check connection of high-pressure Pd sensor connector. • Check connection of low-pressure Ps sensor connector. • Check for defect in pressure sensors Pd and Ps. • Check for error in outdoor P.C. board (I/F). • Check for deficiency in compressive output of compressor.
F22	F22	–		I/F	TD3 sensor error	All stop	Sensor resistance is infinity or zero. (open / short circuit)	• Check connection of TD3 sensor connector. • Check resistance characteristics of TD3 sensor. • Check for defect in outdoor P.C. board (I/F).
F23	F23	–	43	I/F	Ps sensor error	All stop	Output voltage of Ps sensor is zero.	• Check for connection error involving Ps sensor and Pd sensor connectors. • Check connection of Ps sensor connector. • Check for defect in Ps sensor. • Check for deficiency in compressive output of compressor. • Check for defect in 4-way valve. • Check for defect in outdoor P.C. board (I/F). • Check for defect in SV4 circuit.

Check code				Location of detection	Description	System status	Error detection condition(s)	Check items (locations)
Main remote controller	Outdoor 7-segment display		AI-NET central control remote controller					
	F24	–						
F24	F24	–	43	I/F	Pd sensor error	All stop	Output voltage of Pd sensor is zero (sensor open-circuited). Pd > 4.15 MPa despite compressor having been turned off.	• Check connection of Pd sensor connector. • Check for defect in Pd sensor. • Check for defect in outdoor P.C. board (I/F).
F29	–	–	12	Indoor unit	Other indoor error	Stop of corresponding unit	Indoor P.C. board does not operate normally.	• Check for defect in indoor P.C. board (faulty EEPROM)
F31	F31	–	1C	I/F	Outdoor EEPROM error	All stop *1	Outdoor P.C. board (I/F) does not operate normally.	• Check power supply voltage. • Check power supply noise. • Check for defect in outdoor P.C. board (I/F).
H01	H01	01: Compressor 1 side 02: Compressor 2 side 03: Compressor 3 side	1F	IPDU	Compressor breakdown	All stop	Inverter current detection circuit detects overcurrent and shuts system down.	• Check power supply voltage. (AC200 V ± 10 %). • Check for defect in compressor. • Check for possible cause of abnormal overloading. • Check for defect in outdoor P.C. board (A3-IPDU).
H02	H02	01: Compressor 1 side 02: Compressor 2 side 03: Compressor 3 side	1d	IPDU	Compressor error (lockup) MG-CTT error	All stop	Overcurrent is detected several seconds after startup of inverter compressor.	• Check for defect in compressor. • Check power supply voltage. (AC200 V ± 10 %). • Check compressor system wiring, particularly for open phase. • Check connection of connectors / terminals on A3-IPDU P.C. board. • Check conductivity of case heater. (Check for refrigerant entrapment inside compressor.) • Check for defect in outdoor P.C. board (A3-IPDU). • Check outdoor MG-CTT.
H03	H03	01: Compressor 1 side 02: Compressor 2 side 03: Compressor 3 side	17	IPDU	Current detection circuit error	All stop	Current flow of at least specified magnitude is detected despite inverter compressor having been shut turned off.	• Check current detection circuit wiring. • Check defect in outdoor P.C. board (A3-IPDU).
H05	H05	–		I/F	TD1 sensor miswiring (incomplete insertion)	All stop	Discharge temperature of compressor 1 (TD1) does not increase despite compressor being in operation.	• Check installation of TD1 sensor. • Check connection of TD1 sensor connector and wiring. • Check resistance characteristics of TD1 sensor. • Check for defect in outdoor P.C. board (I/F).
H06	H06	–	20	I/F	Activation of low-pressure protection	All stop	Low-pressure Ps sensor detects operating pressure lower than 0.02 MPa.	• Check service valves to confirm full opening (both gas and liquid sides). • Check outdoor PMVs for clogging (PMV1, 2). • Check for defect in SV2 or SV4 circuits. • Check for defect in low-pressure Ps sensor. • Check indoor filter for clogging. • Check valve opening status of indoor PMV. • Check refrigerant piping for clogging. • Check operation of outdoor fan (during heating). • Check for insufficiency in refrigerant quantity.

MG-CTT: Magnet contactor

*1 Total shutdown in case of header unit
Continued operation in case of follower unit

Check code				Location of detection	Description	System status	Error detection condition(s)	Check items (locations)
Main remote controller	Outdoor 7-segment display		AI-NET central control remote controller					
	Check code	Sub-code						
H07	H07	–	d7	I/F	Low oil level protection	All stop	Operating compressor detects continuous state of low oil level for about 2 hours.	<All outdoor units in corresponding line to be checked> • Check balance pipe service valve to confirm full opening. • Check connection and installation of TK1, TK2, TK3, TK4, and TK5 sensors. • Check resistance characteristics of TK1, TK2, TK3, TK4, and TK5 sensors. • Check for gas or oil leak in same line. • Check for refrigerant entrapment inside compressor casing. • Check SV3A, SV3B, SV3C, SV3D, SV3E, and SV3F valves for defect. • Check oil return circuit of oil separator for clogging. • Check oil equalizing circuit for clogging.
H08	H08	01: TK1 sensor error 02: TK2 sensor error 03: TK3 sensor error 04: TK4 sensor error 05: TK5 sensor error	d4	I/F	Error in temperature sensor for oil level detection	All stop	Sensor resistance is infinity or zero (open / short circuit).	• Check connection of TK1 sensor connector. • Check resistance characteristics of TK1 sensor. • Check for defect in outdoor P.C. board (I/F).
						All stop	Sensor resistance is infinity or zero (open / short circuit).	• Check connection of TK2 sensor connector. • Check resistance characteristics of TK2 sensor. • Check for defect in outdoor P.C. board (I/F).
						All stop	Sensor resistance is infinity or zero (open / short circuit).	• Check connection of TK3 sensor connector. • Check resistance characteristics of TK3 sensor. • Check for defect in outdoor P.C. board (I/F).
						All stop	Sensor resistance is infinity or zero (open / short circuit).	• Check connection of TK4 sensor connector. • Check resistance characteristics of TK4 sensor. • Check for defect in outdoor P.C. board (I/F).
						All stop	Sensor resistance is infinity or zero (open / short circuit).	• Check connection of TK5 sensor connector. • Check resistance characteristics of TK5 sensor. • Check for defect in outdoor P.C. board (I/F).

Check code				Location of detection	Description	System status	Error detection condition(s)	Check items (locations)
Main remote controller	Outdoor 7-segment display		AI-NET central control remote controller					
	Check code	Sub-code						
H14	H14	–		I/F	Compressor 2 case thermo activation	All stop	Compressor 2 case thermo was activated.	• Check Compressor 2 case thermo circuit. (Connector, Wiring, Circuit board) • Open and check the service valve. (Gas side, Liquid side) • Check the outdoor PMV clogging (PMV1, 2). • Check the SV42 circuit. • Check the SV4 circuit (SV41 / 42 miswiring). • Check the opening status of indoor PMV. • Check the four-way valve error. • Check the refrigerant shortage.
H15	H15	–		I/F	TD2 sensor miswiring (incomplete insertion)	All stop	Air discharge temperature of (TD2) does not increase despite compressor 2 being in operation.	• Check installation of TD2 sensor. • Check connection of TD2 sensor connector and wiring. • Check resistance characteristics of TD2 sensor. • Check for defect in outdoor P.C. board (I/F).

Check code				Location of detection	Description	System status	Error detection condition(s)	Check items (locations)
Main remote controller	Outdoor 7-segment display		AI-NET central control remote controller					
	Check code	Sub-code						
H16	H16	SMMS (1 series) 01: TK1 oil circuit error 02: TK2 oil circuit error 03: TK3 oil circuit error 04: TK4 oil circuit error		I/F	Oil detection circuit error	All stop	The temperature change of TK1 cannot be detected even after Compressor 1 starts operating.	• Check the TK1 sensor installation. • Check the TK1 sensor resistant characteristics. • Check the misconnection of TK1, TK2, TK3, or TK4. • Check the SV3E valve error. • Check the oil circuit capillary clogging and non-return valve error. • Check the hibernating refrigerant in compressor.
		SMMS (1 series) 01: TK1 oil circuit error 02: TK2 oil circuit error 03: TK3 oil circuit error 04: TK4 oil circuit error		I/F	Oil detection circuit error	All stop	The temperature change of TK2 cannot be detected even after Compressor 2 starts operating.	• Check the TK2 sensor installation. • Check the TK2 sensor resistant characteristics. • Check the misconnection of TK1, TK2, TK3, or TK4. • Check the SV3E valve error. • Check the oil circuit capillary clogging and non-return valve error. • Check the hibernating refrigerant in compressor.
							The temperature change of TK3 cannot be detected even after Compressor 3 starts operating.	• Check the TK3 sensor installation. • Check the TK3 sensor resistant characteristics. • Check the misconnection of TK1, TK2, TK3, or TK4. • Check the SV3E valve error. • Check the oil circuit capillary clogging and non-return valve error. • Check the hibernating refrigerant in compressor.
							The temperature change of TK4 cannot be detected even after Compressor 4 starts operating, or the temperature difference from that of the other TK sensor changes only in the specified range for a given time or longer.	• Check the TK4 sensor installation. • Check the TK4 sensor resistant characteristics. • Check the misconnection of TK1, TK2, TK3, or TK4. • Check the SV3E valve error. • Check the oil circuit capillary clogging and non-return valve error. • Check the hibernating refrigerant in compressor.
		SMMS-i (4 series) 01: TK1 oil circuit error 02: TK2 oil circuit error 03: TK3 oil circuit error 04: TK4 oil circuit error 05: TK5 oil circuit error	d7	I/F	Oil level detection circuit error	All stop	No temperature change is detected by TK1 despite compressor 1 having been started.	• Check for disconnection of TK1 sensor. • Check resistance characteristics of TK1 sensor. • Check for connection error involving TK1, TK2, TK3, TK4, and TK5 sensors • Check for faulty operation in SV3E or SV3F valve. • Check for clogging in oil equalizing circuit capillary and faulty operation in check valve. • Check for refrigerant entrapment inside compressor.
							No temperature change is detected by TK2 despite compressor 2 having been started.	• Check for disconnection of TK2 sensor. • Check resistance characteristics of TK2 sensor. • Check for connection error involving TK1, TK2, TK3, TK4, and TK5 sensors • Check for faulty operation in SV3E or SV3F valve. • Check for clogging in oil equalizing circuit capillary and faulty operation in check valve. • Check for refrigerant entrapment inside compressor.
							No temperature change is detected by TK3 despite compressor 3 having been started.	• Check for disconnection of TK3 sensor. • Check resistance characteristics of TK3 sensor. • Check for connection error involving TK1, TK2, TK3, TK4, and TK5 sensors • Check for faulty operation in SV3E or SV3F valve. • Check for clogging in oil equalizing circuit capillary and faulty operation in check valve. • Check for refrigerant entrapment inside compressor.

Check code				Location of detection	Description	System status	Error detection condition(s)	Check items (locations)
Main remote controller	Outdoor 7-segment display		AI-NET central control remote controller					
	Check code	Sub-code						
H16	H16	SMMS-i (4 series) 01: TK1 oil circuit error 02: TK2 oil circuit error 03: TK3 oil circuit error 04: TK4 oil circuit error 05: TK5 oil circuit error	d7	I/F	Oil level detection circuit error	All stop	No temperature change is detected by TK4 despite compressor having been started.	• Check for disconnection of TK4 sensor. • Check resistance characteristics of TK4 sensor. • Check for connection error involving TK1, TK2, TK3, TK4, and TK5 sensors • Check for faulty operation in SV3E or SV3F valve. • Check for clogging in oil equalizing circuit capillary and faulty operation in check valve. • Check for refrigerant entrapment inside compressor.
							No temperature change is detected by TK5 despite compressor having been started.	• Check for disconnection of TK5 sensor. • Check resistance characteristics of TK5 sensor. • Check for connection error involving TK1, TK2, TK3, TK4, and TK5 sensors • Check for faulty operation in SV3E valve. • Check for clogging in oil equalizing circuit capillary and faulty operation in check valve. • Check for refrigerant entrapment inside compressor.
H25	H25	–		I/F	TD3 sensor miswiring (incomplete insertion)	All stop	Air discharge temperature (TD3) does not increase despite compressor 3 being in operation.	• Check installation of TD3 sensor. • Check connection of TD3 sensor connector and wiring. • Check resistance characteristics of TD3 sensor. • Check for defect in outdoor P.C. board (I/F).
L02	L02	–		Indoor unit	Outdoor unit model mismatch error	Only the target unit stopped	An error was found on the outdoor unit model.	• Check the model name of the outdoor unit. • Check the miswiring of the communication line between indoor and outdoor.
L03	–	–	96	Indoor unit	Duplicated indoor header unit	Stop of corresponding unit	There is more than one header unit in group.	• Check indoor addresses. • Check for any change made to remote controller connection (group / individual) since indoor address setting.
L04	L04	–	96	I/F	Duplicated outdoor line address	All stop	There is duplication in line address setting for outdoor units belonging to different refrigerant piping systems.	• Check line addresses.
L05	–	–	96	I/F	Duplicated priority indoor unit (as displayed on priority indoor unit)	All stop	More than one indoor unit has been set up as priority indoor unit.	• Check display on priority indoor unit.
L06	L06	No. of priority indoor units	96	I/F	Duplicated priority indoor unit (as displayed on indoor unit other than priority indoor unit)	All stop	More than one indoor unit have been set up as priority indoor unit.	• Check displays on priority indoor unit and outdoor unit.
L07	–	–	99	Indoor unit	Connection of group control cable to stand-alone indoor unit	Stop of corresponding unit	There is at least one stand-alone indoor unit to which group control cable is connected.	• Check indoor addresses.
L08	L08	–	99	Indoor unit	Indoor group / addresses not set	Stop of corresponding unit	Address setting has not been performed for indoor units.	• Check indoor addresses. **Note:** **This code is displayed when power is turned on for the first time after installation.**
L09	–	–	46	Indoor unit	Indoor capacity not set	Stop of corresponding unit	Capacity setting has not been performed for indoor unit.	Set indoor capacity. (DN = 11)

<table>
<tr><th colspan="4">Check code</th><th rowspan="3">Location of detection</th><th rowspan="3">Description</th><th rowspan="3">System status</th><th rowspan="3">Error detection condition(s)</th><th rowspan="3">Check items (locations)</th></tr>
<tr><th rowspan="2">Main remote controller</th><th colspan="2">Outdoor 7-segment display</th><th rowspan="2">AI-NET central control remote controller</th></tr>
<tr><th>Check code</th><th>Sub-code</th></tr>
<tr><td>L10</td><td>L10</td><td>–</td><td>88</td><td>I/F</td><td>Outdoor capacity not set</td><td>All stop</td><td>Jumper wire provided on P.C. board for servicing I/F P.C. board has not been removed as required for given model.</td><td>Check model setting of P.C. board for servicing outdoor I/F P.C. board.</td></tr>
<tr><td>L17</td><td>L17</td><td>Target indoor address</td><td></td><td>I/F</td><td>Outdoor unit model mismatch error</td><td></td><td>The outdoor unit model is duplicate. The Cool/Heat Flex series 1/2 are duplicate.</td><td>• Check the outdoor unit model.</td></tr>
<tr><td>L18</td><td>L18</td><td>–</td><td></td><td>I/F</td><td>Cool / heat switch unit error</td><td>Only the target unit stopped</td><td>The heating operation was performed without the cool-only setting configured in a cool-only room where a cool/ heat switch unit is not connected.</td><td>• Check the remote controller setting. (DN="0F")
• Check the cool / heat switching unit.
Check the piping connection of the switching unit. (Miswiring of discharge gas / suction gas)
Check the SVS / SVD valve miswiring / misinstallation.</td></tr>
<tr><td>L20</td><td>–</td><td>–</td><td>98</td><td>AI-NET Indoor unit</td><td>Duplicated central control address</td><td>All stop</td><td>There is duplication in central control address setting.</td><td>• Check central control addresses.
• Check network adaptor P.C. board (applicable to AI-NET).</td></tr>
<tr><td>L28</td><td>L28</td><td>–</td><td>46</td><td>I/F</td><td>Too many outdoor units connected</td><td>All stop</td><td>There are more than four outdoor units.</td><td>• Check No. of outdoor units connected (Only up to 4 units per system allowed).
• Check communication lines between outdoor units.
• Check for defect in outdoor P.C. board (I/F).</td></tr>
<tr><td>L29</td><td>L29</td><td>SMMS (Series 1)
01: A3-IPDU1 error
02: A3-IPDU2 error
03: A3-IPDU1/A3-IPDU2 error
04: Fan IPDU error
05: A3-IPDU1 + Fan IPDU error
06: A3-IPDU2 + Fan IPDU error
07: All IPDU error or Communication error between IPDU and I/F circuit board or Outdoor I/F circuit board error

SMMS-i (Series 4)
<table>
<tr><th></th><th colspan="3">A3-IPDU</th><th>Fan</th></tr>
<tr><th></th><th>1</th><th>2</th><th>3</th><th>IPDU</th></tr>
<tr><td>01</td><td>O</td><td></td><td></td><td></td></tr>
<tr><td>02</td><td></td><td>O</td><td></td><td></td></tr>
<tr><td>03</td><td>O</td><td>O</td><td></td><td></td></tr>
<tr><td>04</td><td></td><td></td><td>O</td><td></td></tr>
<tr><td>05</td><td>O</td><td></td><td>O</td><td></td></tr>
<tr><td>06</td><td></td><td>O</td><td>O</td><td></td></tr>
<tr><td>07</td><td>O</td><td>O</td><td>O</td><td></td></tr>
<tr><td>08</td><td></td><td></td><td></td><td>O</td></tr>
<tr><td>09</td><td>O</td><td></td><td></td><td>O</td></tr>
<tr><td>0A</td><td></td><td>O</td><td></td><td>O</td></tr>
<tr><td>0B</td><td>O</td><td>O</td><td></td><td>O</td></tr>
<tr><td>0C</td><td></td><td></td><td>O</td><td>O</td></tr>
<tr><td>0D</td><td>O</td><td></td><td>O</td><td>O</td></tr>
<tr><td>0E</td><td></td><td>O</td><td>O</td><td>O</td></tr>
<tr><td>0F</td><td>O</td><td>O</td><td>O</td><td>O</td></tr>
</table>
Symbol O signifies site of IPDU error.</td><td>CF</td><td>I/F</td><td>Error in No. of IPDUs</td><td>All stop</td><td>Insufficient number of IPDUs are detected when power is turned on.</td><td>• Check model setting of P.C. board for servicing outdoor I/F P.C. board.
• Check connection of UART communication connector.
• Check A3-IPDU, fan IPDU, and I/F P.C. board for defect.</td></tr>
</table>

Check code				Location of detection	Description	System status	Error detection condition(s)	Check items (locations)
Main remote controller	Outdoor 7-segment display		AI-NET central control remote controller					
	Check code	Sub-code						
L30	L30	Detected indoor address	b6	Indoor unit	External interlock of indoor unit	Stop of corresponding unit	• Signal is present at external error input terminal (CN80) for 1 minute.	**When external device is connected to CN80 connector:** 1) Check for defect in external device. 2) Check for defect in indoor P.C. board. **When external device is not connected to CN80 connector:** 1) Check for defect in indoor P.C. board.
–	L31	–	–	I/F	Extended IC error	Continued operation	There is part failure in P.C. board (I/F).	Check outdoor P.C. board (I/F).
P01	–	–	11	Indoor unit	Indoor fan motor error	Stop of corresponding unit		• Check the lock of fan motor (AC fan). • Check wiring.
P03	P03	–	1E	I/F	Discharge temperature TD1 error	All stop	Discharge temperature (TD1) exceeds 115 °C.	• Check outdoor service valves (gas side, liquid side) to confirm full opening. • Check outdoor PMVs (PMV1, 2, 4) for clogging. • Check resistance characteristics of TD1 sensor. • Check for insufficiency in refrigerant quantity. • Check for defect in 4-way valve. • Check for leakage of SV4 circuit. • Check SV4 circuit (wiring or installation error in SV41, SV42 or SV43).
P04	P04	01: Compressor 1 side 02: Compressor 2 side 03: Compressor 3 side	21	IPDU	Activation of high-pressure SW	All stop	High-pressure SW is activated.	• Check connection of high-pressure SW connector. • Check for defect in Pd pressure sensor. • Check outdoor service valves (gas side, liquid side) to confirm full opening. • Check for defect in outdoor fan. • Check for defect in outdoor fan motor. • Check outdoor PMVs (PMV1, 2) for clogging. • Check indoor / outdoor heat exchangers for clogging. • Check for short-circuiting of outdoor suction / discharge air flows. • Check SV2 circuit for clogging. • Check for defect in outdoor P.C. board (I/F). • Check for error in indoor fan system (possible cause of air flow reduction). • Check opening status of indoor PMV. • Check indoor-outdoor communication line for wiring error. • Check for faulty operation of check valve in discharge pipe convergent section. • Check gas balancing SV4 valve circuit. • Check SV5 valve circuit. • Check for refrigerant overcharging.

Check code				Location of detection	Description	System status	Error detection condition(s)	Check items (locations)
Main remote controller	Outdoor 7-segment display		AI-NET central control remote controller					
	Check code	Sub-code						
P05	P05	SMMS (Series 1) 01: Open phase detected 02: Phase sequence error		I/F	Open phase detected, Phase sequence error	All stop	• Phase sequence error was detected when the power is turned on. • Open phase error was detected when the power is turned on.	• Check the phase sequence of outdoor power wiring. • Check the outdoor PC board (I/F) error.
		SMMS-i (Series 4) 00:	AF	I/F	Detection of open phase / phase sequence	All stop	• Open phase is detected when power is turned on. • Inverter DC voltage is too high (overvoltage) or too low (undervoltage).	• Check for defect in outdoor P.C. board (I/F).
		01: Compressor 1 side 02: Compressor 2 side 03: Compressor 3 side			Inverter DC voltage (Vdc) error (compressor) MG-CTT error			
P07	P07	01: Compressor 1 side 02: Compressor 2 side 03: Compressor 3 side	1C	IPDU I/F	Heat sink overheating error	All stop	Temperature sensor built into IGBT (TH) is overheated.	• Check power supply voltage. • Check outdoor fan system error. • Check heat sink cooling duct for clogging. • Check IGBT and heat sink for thermal performance for faulty installation. (e.g. mounting screws and thermal conductivity) • Check for defect in A3-IPDU. (faulty IGBT built-in temperature sensor (TH))
P10	P10	Detected indoor address	0b	Indoor unit	Indoor overflow error	All stop	• Float switch operates. • Float switch circuit is open-circuited or disconnected at connector.	• Check float switch connector. • Check operation of drain pump. • Check drain pump circuit. • Check drain pipe for clogging. • Check for defect in indoor P.C. board.
P12	–	–	11	Indoor unit	Indoor fan motor error	Stop of corresponding unit	• Motor speed measurements continuously deviate from target value. • Overcurrent protection is activated.	• Check connection of fan connector and wiring. • Check for defect in fan motor. • Check for defect in indoor P.C. board. • Check impact of outside air treatment (OA).

MG-CTT: Magnet contactor

Check code				Location of detection	Description	System status	Error detection condition(s)	Check items (locations)
Main remote controller	Outdoor 7-segment display		AI-NET central control remote controller					
	Check code	Sub-code						
P13	P13	–	47	I/F	Outdoor liquid backflow detection error	All stop	<During cooling operation> When system is in cooling operation, high pressure is detected in follower unit that has been turned off. <During heating operation> When system is in heating operation, outdoor PMV 1 or 2 continuously registers opening of 100p or less while under SH control.	• Check full-close operation of outdoor PMV (1, 2, 4). • Check for defect in Pd or Ps sensor. • Check gas balancing circuit (SV2) for clogging. • Check balance pipe. • Check SV3B circuit for clogging. • Check defect in outdoor P.C. board (I/F). • Check capillary of oil separator oil return circuit for clogging. • Check for leakage of check valve in discharge pipe convergent section.
P15	P15	01: TS condition	AE	I/F	Gas leakdetection (TS1 condition)	All stop	Protective shutdown due to sustained suction temperature at or above judgment criterion for at least 10 minutes is repeated four times or more. <TS error judgment criterion> In cooling operation: 60 °C In heating operation: 40 °C	• Check for insufficiency in refrigerant quantity. • Check outdoor service valves (gas side, liquid side) to confirm full opening. • Check PMVs (PMV1, 2) for clogging. • Check resistance characteristics of TS1 sensor. • Check for defect in 4-way valve. • Check SV4 circuit for leakage
		02: TD condition	AE	I/F	Gas leak detection (TD condition)	All stop	Protective shutdown due to sustained discharge temperature (TD1, TD2 or TD3) at or above 108 °C for at least 10 minutes is repeated four times or more.	• Check for insufficiency in refrigerant quantity. • Check PMVs (PMV 1, 2) for clogging. • Check resistance characteristics of TD1, TD2 and TD3 sensors. • Check indoor filter for clogging. • Check piping for clogging. • Check SV4 circuit (for leakage or coil installation error).
P17	P17	–	bb	I/F	Discharge temperature TD2 error	All stop	Discharge temperature (TD2) exceeds 115 °C.	• Check outdoor service valves (gas side, liquid side) to confirm full opening. • Check outdoor PMVs (PMV1, 2, 4) for clogging. • Check resistance characteristics of TD2 sensor. • Check for defect in 4-way valve. • Check SV4 circuit for leakage. • Check SV4 circuit (for wiring or installation error involving SV41, SV42 and SV43).
P18	P18	–		I/F	Discharge temperature TD3 error	All stop	Discharge temperature (TD3) exceeds 115 °C.	• Check outdoor service valves (gas side, liquid side) to confirm full opening. • Check outdoor PMVs (PMV1, 2, 4) for clogging. • Check resistance characteristics of TD3 sensor. • Check for defect in 4-way valve. • Check SV43 circuit for leakage. • Check SV4 circuit (for wiring or installation error involving SV41, SV42 and SV43).

Check code				Location of detection	Description	System status	Error detection condition(s)	Check items (locations)
Main remote controller	Outdoor 7-segment display		AI-NET central control remote controller					
	Check code	Sub-code						
P19	P19	Detected outdoor unit No.	8	I/F	4-way valve reversing error	All stop	Abnormal refrigerating cycle data is collected during heating operation.	• Check for defect in main body of 4-way valve. • Check for coil defect in 4-way valve and loose connection of its connector. • Check resistance characteristics of TS1 and TE1 sensors. • Check output voltage characteristics of Pd and Ps pressure sensors. • Check for wiring error involving TE1 and TL sensors.
P20	P20	–	22	I/F	Activation of high-pressure protection	All stop	Pd sensor detects pressure equal to or greater than 3.6 MPa.	• Check for defect in Pd pressure sensor. • Check service valves (gas side, liquid side) to confirm full opening. • Check for defect in outdoor fan. • Check for defect in outdoor fan motor. • Check outdoor PMVs (PMV1, 2, 4) for clogging. • Check indoor / outdoor heat exchangers for clogging. • Check for short-circuiting of outdoor suction / discharge air flows. • Check SV2 circuit for clogging. • Check for defect in outdoor P.C. board (I/F). • Check for defect in indoor fan system (possible cause of air flow reduction). • Check opening status of indoor PMV. • Check indoor-outdoor communication line for wiring error. • Check for faulty operation of check valve in discharge pipe convergent section. • Check gas balancing SV4 valve circuit. • Check SV5 valve circuit. • Check for refrigerant overcharging.

Check code				Location of detection	Description	System status	Error detection condition(s)	Check items (locations)
Main remote controller	Outdoor 7-segment display		AI-NET central control remote controller					
	Check code	Sub-code						
P22	P22	SMMS (Series 1) 08: Out of step 0A: IDC activation 0E: Sync error 0F: Control error 06: Maximum rotation exceeded 04: Rotation difference error 0D: Lock 0C: Fan lock		IPDU	Outdoor fan IPDU error	All stop	(Sub code: 08) FAN IPDU position detection circuit Position detection is not performed properly.	• Check the fan motor. • Check the connector connection for fan motor. • Check the error of IPDU board for fan.
						All stop	(Sub code: 0A) FAN IPDU overcurrent protection circuit Overcurrent was detected when the fan started running or during operation.	• Check the fan motor. • Check the error of IPDU board for fan.
						All stop	(Sub code: 0E) FAN IPDU position detection circuit Position detection is not performed properly.	• Check the fan motor. • Check the connector connection for fan motor. • Check the error of IPDU board for fan.
						All stop	(Sub code: 0F) FAN IPDU position detection circuit Position detection is not performed properly.	• Check the fan motor. • Check the connector connection for fan motor. • Check the error of IPDU board for fan.
						All stop	(Sub code: 06) External factors such as blast Position detection is not performed properly. (Restarted in 6 seconds)	• Check the fan motor. • Check the error of IPDU board for fan.
						All stop	(Sub code: 04) External factors such as blast The difference between targeted rotation and actual rotation is 25% or more. (Restarted in 6 seconds)	• Check the fan motor. • Check the error of IPDU board for fan.
						All stop	(Sub code: 0D) FAN IPDU position detection circuit Position detection is not performed properly. (No wind)	• Check the fan motor. • Check the connector connection for fan motor. • Check the error of IPDU board for fan.
						All stop	(Sub code: 0C) External factors such as blast Position detection is not performed properly. (Wind blows) (Restarted in 6 seconds)	• Check the fan motor. • Check the error of IPDU board for fan.

Check code				Location of detection	Description	System status	Error detection condition(s)	Check items (locations)
Main remote controller	Outdoor 7-segment display		AI-NET central control remote controller					
	Check code	Sub-code						
P22	P22	SMMS-i (Series 4) 0∗: IGBT circuit 1∗: Position detection circuit error 3∗: Motor lockup error 4∗: Motor current detection C∗: TH sensor temperature error D∗: TH sensor error E∗: Inverter DC voltage error (outdoor fan) **Note:** **Although letters 0 to F appear at locations indicated by "∗", please ignore them.**	1A	IPDU	Outdoor fan IPDU error	All stop	(Sub code: 0∗) Fan IPDU over current protection circuit Flow of current equal to or greater than the specified value is detected during startup of the fan.	• Check fan motor. • Check for defect in fan IPDU P.C. board.
						All stop	(Sub code: 1∗) Fan IPDU position detection circuit Position detection is not going on normally.	• Check fan motor. • Check connection of fan motor connector. • Check for defect in fan IPDU P.C. board.
						All stop	(Sub code: 3∗) Gusty wind, an obstruction, or another external factor Speed estimation is not going on normally.	• Check fan motor. • Check for defect in fan IPDU P.C. board.
						All stop	(Sub code: 4∗) Fan IPDU over current protection circuit Flow of current equal to or greater than the specified value is detected during operation of the fan.	• Check fan motor. • Check connection of fan motor connector. • Check for defect in fan IPDU P.C. board.
						All stop	(Sub code: C∗) Higher temperature than the specified value is detected during operation of the fan.	• Check fan motor. • Check for defect in fan IPDU P.C. board.
						All stop	(Sub code: D∗) The resistance value of the sensor is infinite or zero (open or short circuit).	• Check for defect in fan IPDU P.C. board.
						All stop	(Sub code: E∗) Fan IPDU DC voltage protection circuit The DC voltage higher or lower than the specified value is detected.	• Check power voltage of the main power supply. • Check for defect in fan IPDU P.C. board. • Check connection of fan IPDU P.C. board.
P26	P26	01: Compressor 1 side 02: Compressor 2 side 03: Compressor 3 side	14	IPDU	G-TR short-circuit protection error	All stop	Overcurrent is momentarily detected during startup of compressor.	• Check connector connection and wiring on A3-IPDU P.C. board. • Check for defect in compressor (layer short-circuit). • Check for defect in outdoor P.C. board (A3-IPDU).
P29	P29	01: Compressor 1 side 02: Compressor 2 side 03: Compressor 3 side	16	IPDU	Compressor position detection circuit error	All stop	Position detection is not going on normally.	• Check wiring and connector connection. • Check for compressor layer short-circuit. • Check for defect in A3-IPDU P.C. board.
P31	–	–	47	Indoor unit	Other indoor error (group follower unit error)	Stop of corresponding unit	There is error in other indoor unit in group, resulting in detection of E07/L07/L03/L08.	• Check indoor P.C. board.

Errors detected by TCC-LINK central control device

Check code				Location of detection	Description	System status	Error detection condition(s)	Check items (locations)
Main remote controller	Outdoor 7-segment display		AI-NET central control remote controller					
	Sub-code							
C05	–		–	TCC-LINK	TCC-LINK central control device transmission error	Continued operation	Central control device is unable to transmit signal.	• Check for defect in central control device. • Check for defect in central control communication line. • Check termination resistance setting.
C06	–		–		TCC-LINK central control device reception error	Continued operation	Central control device is unable to receive signal.	• Check for defect in central control device. • Check for defect in central control communication line. • Check termination resistance setting. • Check power supply for devices at other end of central control communication line. • Check defect in P.C. boards of devices at other end of central control communication line.
C12	–		–	General-purpose device I/F	Blanket alarm for general-purpose device control interface	Continued operation	Error signal is input to control interface for general-purpose devices.	• Check error input.
P30	Differs according to nature of alarm-causing error			TCC-LINK	Group control follower unit error	Continued operation	Error occurs in follower unit under group control. ([P30] is displayed on central control remote controller.)	• Check check code of unit that has generated alarm.
	(L20 displayed.)				Duplicated central control address	Continued operation	There is duplication in central control addresses.	• Check address settings.

6-5. Sensor characteristics

Indoor unit

▼ Temperature sensor characteristics

Indoor TA sensor

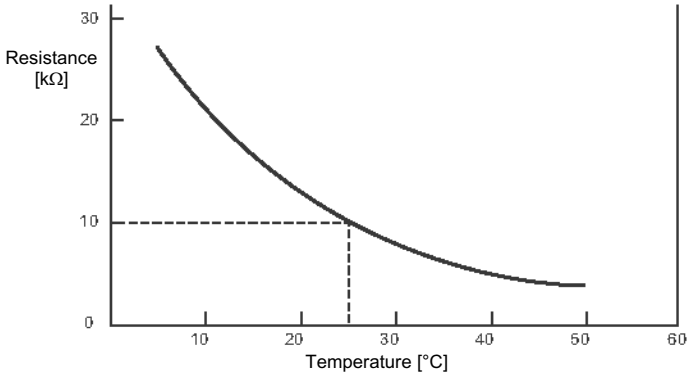

Temperature [°C]	Resistance [kΩ]
0	33.9
5	26.1
10	20.3
15	15.9
20	12.6
25	10.0
30	8.0
35	6.4
40	5.2
45	4.2
50	3.5
55	2.8
60	2.4

Indoor TC1 sensor

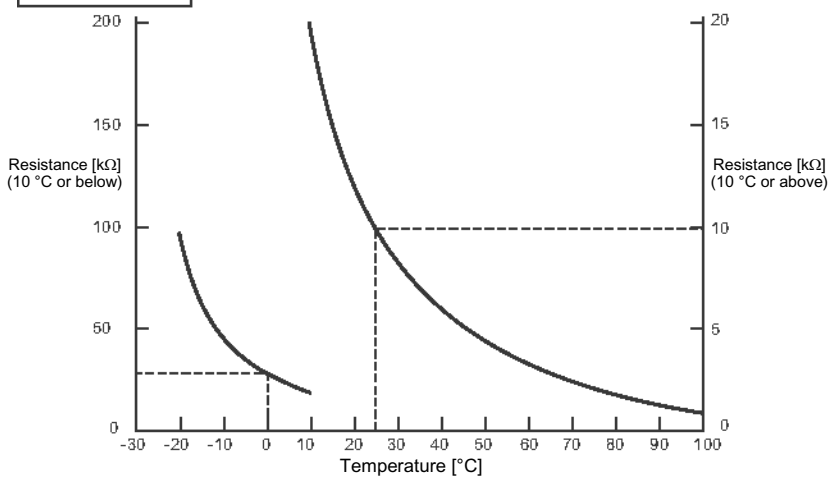

Temperature [°C]	Resistance [kΩ]
-20	99.9
-15	74.1
-10	55.6
-5	42.2
0	32.8
5	25.4
10	19.8
15	15.6
20	12.4
25	10.0
30	8.1
35	6.5
40	5.3
45	4.4
50	3.6
55	3.0
60	2.5
65	2.1
70	1.8
75	1.5
80	1.3
85	1.1
90	1.0
95	0.8
100	0.7

Indoor TC2 and TCJ sensors

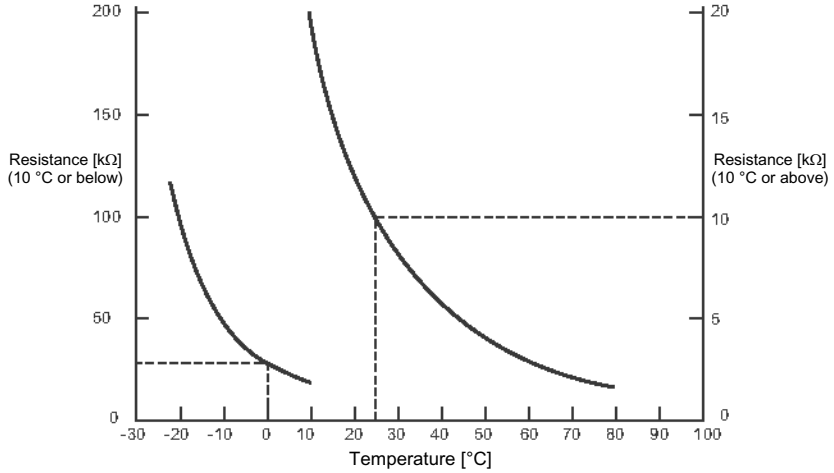

Temperature [°C]	Resistance [kΩ]
-20	115.2
-15	84.2
-10	62.3
-5	46.6
0	35.2
5	26.9
10	20.7
15	16.1
20	12.6
25	10.0
30	8.0
35	6.4
40	5.2
45	4.2
50	3.5
55	2.8
60	2.4
65	2.0
70	1.6
75	1.4
80	1.2

7 P.C. Board Exchange Procedures

■ Indoor unit

7-1. Replacement of indoor P.C. boards

Part code	Model type	P.C. board type
431-6V-437	MMU-AP∗∗4MH series MMU-AP∗∗4SH series MMC-AP∗∗4H series MMD-AP∗∗4SPH series	MCC-1402
431-6V-438	MMD-AP∗∗4BH series	MCC-1402
431-6V-444	MMU-AP∗∗4YH series MMD-AP∗∗4H series MMF-AP∗∗4H series MML-AP∗∗4BH series	MCC-1403
431-6V-469	MML-AP∗∗4H series	MCC-1403

Points to note when replacing indoor P.C. board assembly

The electrically erasable programmable read-only memory (hereinafter EEPROM, IC10) mounted on an indoor P.C. board holds important setting data, including the type and capacity codes intrinsic to the model (set at the factory), as well as the line / indoor / group addresses, high ceiling adjustment setting and the like (during installation, either automatically or manually). Proceed with the replacement of an indoor P.C. board assembly in accordance with the procedure described below.

After completion of the work, check the settings again, including the indoor unit No. and group header / follower designation, and confirm the integrity of the refrigerating cycle by conducting a test operation, etc.

<Replacement procedure>

Method 1

If it is possible to turn on the indoor unit and read the setting data from the P.C. board to be replaced via a wired remote controller -

Reading EEPROM data: **Procedure 1**

⇩

Replacing P.C. board and turning on power: **Procedure 2**

⇩

Writing EEPROM data in new EEPROM: **Procedure 3**

⇩

Resetting power supply (applicable to all indoor units connected to remote controller in case of group operation)

Method 2

If it is not possible to turn on the indoor unit or read the setting data from the P.C. board to be replaced via a wired remote controller or operate the remote controller due to the failure of its power supply circuit -

Replacing EEPROM (IC10) (For the location of this component and the method to replace it, see the " EEPROM location diagram" section.)

- The EEPROM on the P.C. board to be replaced needs to be removed and mounted on the service P.C. board.

⇩

Replacing P.C. board and turning on power: **Procedure 2**

⇩

Reading EEPROM data: **Procedure 1**

- If data cannot be read, go to Method 3.

⇩

Replacing EEPROM (IC10) again (For the location of this component and the method to replace it, see the " EEPROM location diagram" section.)

- The old EEPROM, supplied with the P.C. board to be replaced and now mounted on the service P.C. board, needs to be replaced with the new EEPROM, supplied with the service P.C. board.

⇩

Replacing P.C. board and turning on power: **Procedure 2**

⇩

Writing EEPROM data in new EEPROM: **Procedure 3**

⇩

Resetting power supply (applicable to all indoor units connected to remote controller in case of group operation)

Method 3

If it is not possible to read the setting data due to the failure of the EEPROM itself -

Replacing P.C. board and turning on power: **Procedure 2**

⇩

Writing EEPROM data on basis of information supplied by customer (e.g. high ceiling adjustment setting and optional connection setting): **Procedure 3**

⇩

Resetting power supply (applicable to all indoor units connected to remote controller in case of group operation)

Procedure 1: reading setting data from EEPROM

(Read the setting data from EEPROM, including both the factory settings and any modifications made to them on site.)

1 Push the TEST + SET + CL buttons simultaneously and hold for at least 4 seconds. (This number corresponds to the same number shown on the Remote Controller Operation Diagram.)

* In the case of group control, the unit No. displayed first is the indoor unit No. of the header unit. At the same time, the CODE No. (DN code) 10 is displayed, and the fan of the selected indoor unit comes on, with the louver swinging, depending on the model.

2 Each time the UNIT LOUVER button is pushed, one of the indoor unit No. under group control is displayed in turn.

* The fan of the selected indoor unit comes on, with the louvers swinging, depending on the model.

3 The TEMP. button allows you to move the CODE No. (DN code) up / down by one place.

4 First, change the CODE No. (DN code) from 10 to 01. (To set filter sign lighting time)

Jot down the setting data displayed.

5 Change the CODE No. (DN code) using the TEMP. button.

Again, jot down the setting data displayed.

6 Repeat step 5 **until all the setting data has been jotted down. (See the CODE No. list.)**

* CODE No. (DN code) go from 01 to FF with a few gaps along the way.

7 When finished, push the TEST button to bring the system back to normal off state.

(It takes the system about 1 minute to become responsive to remote controller operation.)

CODE No. (DN code) necessary at minimum

DN	Contents
10	Type
11	Indoor unit capacity
12	Line address
13	Indoor address
14	Group address

The type and capacity of the indoor unit are necessary for fan speed setting.

Remote controller operation diagram

<Fig. 1 RBC-AMT32E>

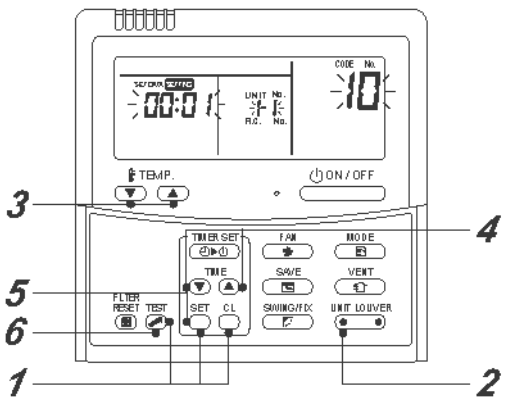

<Fig. 2 RBC-AMS41E>

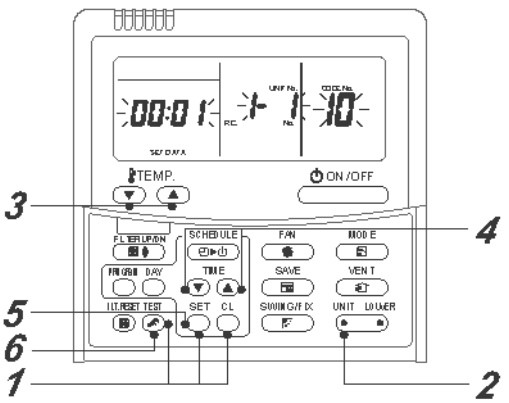

Procedure 2: replacing P.C. board

1 Replace the faulty P.C. board with a service P.C. board.

Be sure to replicate the old jumper setting (removal), switch setting (SW501), and connector short-circuit setting (e.g. CN34) on the service P.C. board. (See the diagram at below.)

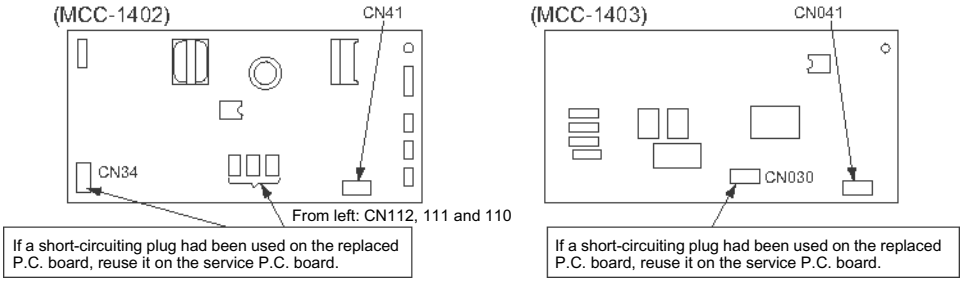

2 It is necessary to establish a one-to-one correspondence between the indoor unit being serviced and the remote controller.

Turn on the indoor unit using one of the methods described below according to the system configuration.

(1) Single (stand-alone) operation

Turn on the indoor unit and proceed to **Procedure 3**.

(2) Group operation

A) If it is possible to selectively turn on the indoor unit being serviced

Turn on the indoor unit being serviced and proceed to **Procedure 3**.

B) If it is not possible to selectively turn on the indoor unit being serviced (**Case 1**)

a) Temporarily disconnect the group control wiring from terminals A and B of the indoor unit being serviced.

b) Connect the remote controller wiring to the terminals, turn on the indoor unit, and proceed to **Procedure 3**.

* If this method cannot be used, proceed to the alternative method described below (**Case 2**).

C) If it is not possible to selectively turn on the indoor unit being serviced (**Case 2**)

a) Remove the CN41 connectors of all other indoor units in the same group.

b) Turn on the indoor unit and proceed to **Procedure 3**.

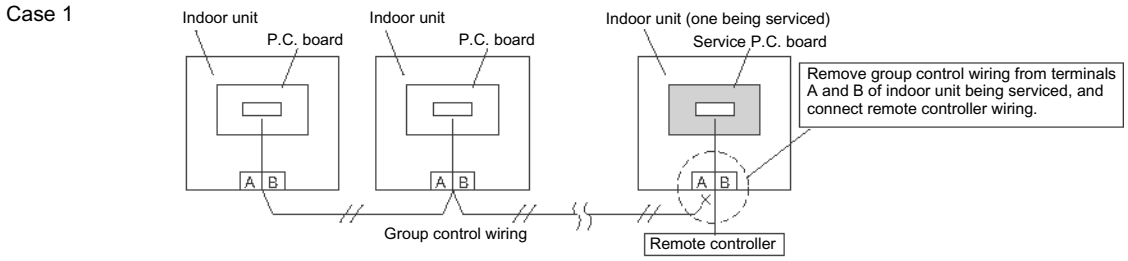

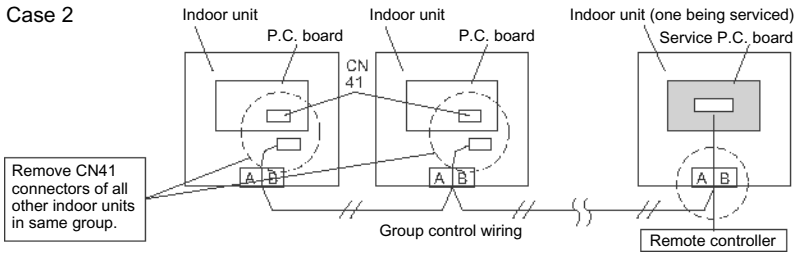

* Be sure to restore the temporarily removed group control wiring and CN41 connectors to their initial states after Procedure 3 has been completed.

Procedure 3: writing setting data in EEPROM

(The EEPROM of the service P.C. board has been set to the factory default values.)

<Fig. 1 RBC-AMT32E>

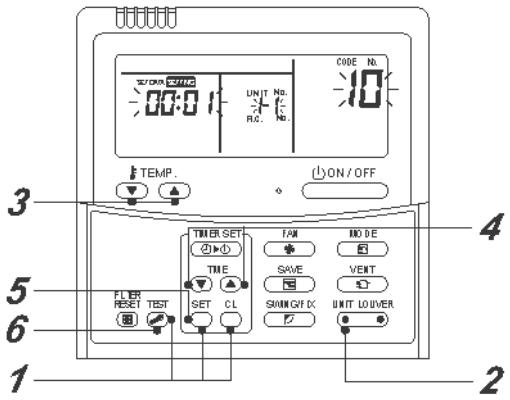

1 Push the TEST + SET + CL buttons simultaneously and hold for at least 4 seconds. (This number corresponds to the same number shown on the Remote Controller Operation Diagram.)

(Under UNIT No., ALL is displayed.)

At the same time, the CODE No. (DN code) 10 is displayed, and the fan of the indoor unit comes on, with the louver swinging, depending on the model.

2 Push the left part of the UNIT LOUVER button to display the indoor unit No. one by one in the group control. Specify the indoor unit No. whose service PC board was replaced.

(This operation is not available if the UNIT No. shows ALL.)

3 The TEMP. button allows you to moved the CODE No. (DN code) up / down by one place.

4 First, set the type and capacity codes of the indoor unit.

(Changing the type and capacity codes in EEPROM overwrites the factory default settings.)

(1) Set the CODE No. (DN code) to 10 (no change)

(2) Use the TIME button to select the type.

(For example, 0001 is for the 4-way cassette type.) - See the CODE No. list.

(3) Push the SET button. (The display should change from flashing to steady.)

(4) Use the TEMP. button to set the CODE No. (DN code) to 11.

(5) Use the TIME button to set the capacity code.

(For example, 0012 is for the 027 type.) - See the CODE No. list.

(6) Push the SET button. (The display should change from flashing to steady.)

(7) Push the TEST button to bring the system back to normal off state.

5 Next, write any setting changes made on-site after installation, such as address settings, in the EEPROM. Perform the tasks specified in step 1 again.

6 Use the TEMP. button to set the CODE No. (DN code) to 01 (To set filter sign lighting time)

7 Check the value displayed with the value jotted down in Procedure 1 and information proved by the customer.

(1) If there is a discrepancy, change the setting in accordance with the jotted-down value, and push the SET button. (The display should change from flashing to steady.)

(2) If there is no discrepancy, do nothing.

8 Use the TEMP. button to change the CODE No. (DN code).

Again, check the value, and change the setting if necessary.

9 Repeat steps 6 and 7 until all the settings are checked.

10 When finished, push the TEST button to bring the system back to normal off state.

In the case of group operation, turn the unit off, reconnect the indoor-indoor group control wiring and CN41 connectors, and turn on all the indoor units.

(It takes the system about 1 minute to become responsive to remote controller operation.)

* CODE No. (DN code) go from 01 to FF with a few gaps along the way.
If you realize you have wrongly corrected a certain setting after pushing the SET button, you can recover the initial value by pushing the CL button, provided that the CODE No. (DN code) is yet to be changed.

EEPROM location diagram

The EEPROM (IC10) is mounted on an IC socket. Use a pair of tweezers, etc. to remove it. When installing it, adjust its orientation as shown in the diagram below.

During EEPROM removal / installation, take care not to bend IC leads.

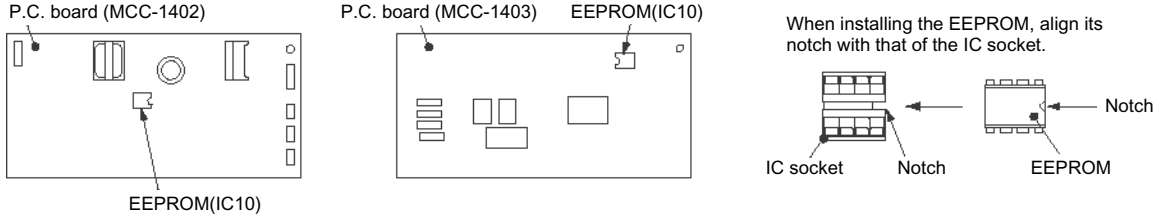

CODE No. list (Example)

CODE No. (DN)	Item	Setting data	Factory-set value	
01	Filter sign lighting time		Depending on Type	
02	Filter pollution leve		0000: standard	
03	Central control address		0099: Not determined	
06	Heating suction temperature shift		0002: +2 °C (Floor standing type: 0)	
0d	Existence of automatic COOL/HEAT mode		0001: No auto mode cooling / heating	* Automatically selection by connected outdoor unit
0F	Cooling only		0000: Heat pump	
10	Type		Depending on model type	
11	Indoor unit capacity		Depending on capacity type	
12	System address		0099: Not determined	
13	Indoor unit address		0099: Not determined	
14	Group address		0099: Not determined	
19	Louver type (wind direction adjustment)		Depending on Type.	
1E	Temperature range of cooling / heating automatic SW control point		0003: 3 deg (Ts ± 1.5)	
28	Power failure automatic recovery		0000: None	
31	Vent Fan (Single operation)		0000: Not possible	
32	Sensor SW (Selection of static pressure)		0000: Body sensor	
5d	High ceiling select		0000: Standard	
60	Timer setting (wired remote controller)		0000: Available	
F0	Swing mode		0001: Standard	
D0	Power save operation		0001: Standard	

Type
Code No. [10]

Setup data	Type	Model abb. name
0000	1-way Cassette	MMU-AP∗∗∗SH
0001 *1, *2	4-way Cassette	MMU-AP∗∗∗2H
0002	2-way Cassette	MMU-AP∗∗∗WH
0003	1-way Cassette (Compact type)	MMU-AP∗∗∗YH
0004	Concealed Duct Standard	MMD-AP∗∗∗BH
0005	Slim Duct	MMD-AP∗∗∗SPH MMD-AP∗∗∗SH
0006	Concealed Duct High Static Pressure	MMD-AP∗∗∗H H
0007	Ceiling	MMC-AP∗∗∗H
0008	High Wall	MMK-AP∗∗∗H
0009	—	—
0010	Floor Standing Cabinet	MML-AP∗∗∗H
0011	Floor Standing Concealed	MML-AP∗∗∗BH
0012	—	—
0013	Floor Standing	MMF-AP∗∗∗H
0014	Compact 4-way Cassette	MMU-AP∗∗∗MH
0016	Fresh air intake unit (Duct type)	MMD-AP∗∗∗HFE

Indoor unit capacity
CODE No. [11]

Setup data	Model	Setup data	Model
0000*	Invalid	0015	036 type
0040	005 type	0016	—
0001	007 type	0017	048 type
0002	—	0018	056 type
0003	009 type	0019	—
0004	—	0020	—
0005	012 type	0021	072 type
0006	—	0022	—
0007	015 type	0023	096 type
0008	—	0024	—
0009	018 type	0025	—
0010	—	0026	—
0011	024 type	0027	—
0012	027 type	0028	—
0013	030 type	~	—
0014	—	0034	—

*1 The initial setup value of EEPROM installed on the service P.C. board
*2 <Model Name: **MMU-AP∗∗∗2H**>
For the above models, set CODE No. to "CE" and the setting data 0000 (initial) to "0001".

8 Detachments

8-1. 1-way cassette (SH)

MMU-AP0154SH*, AP0184SH*, AP0244SH*

Ceiling panel: RBC-US21PGE

No.	Part name	Procedure	Remarks
1	Air intake grille	**REQUIREMENT** Be sure to put on gloves when working; otherwise an injury may be caused. **1. Detachment** 1) Stop operation of the air conditioner, and then turn off switch of the breaker. 2) Remove the screws of air intake grille fixing knob on a side of each filter. 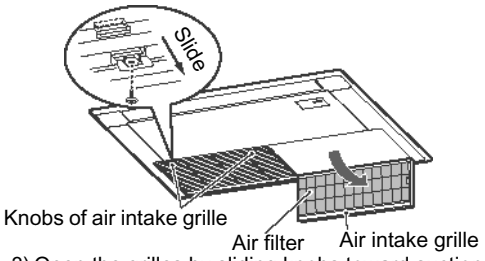 3) Open the grilles by sliding knobs toward suction side. (Both 2 pieces at left and right sides) 4) Pull out the grille by pushing claws at rear hinge (2 positions) with (-) screwdriver. **2. Attachment** 1) Insert the rear hinge (2 positions) into square holes of the panel. (Insert it surely up to the end.) **NOTE** After inserting the hinge, check the grille does not fall out even if pulling the grilles. 2) Close the grilles and slide the hooks (2 positions) toward discharge side to fix them. 3) Remove the screws of air intake grille fixing knob on a side of each filter.	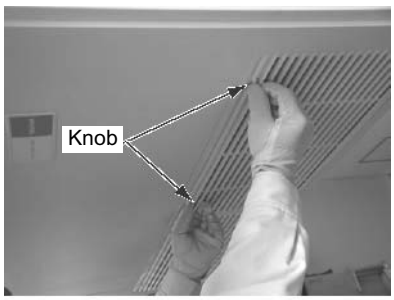 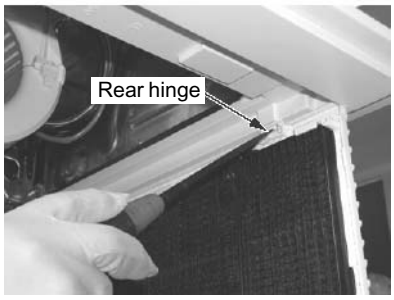

No.	Part name	Procedure	Remarks
2	Electric parts cover	**1. Detachment** 1) Perform work of procedure **1.** of **1**. 2) Loosen fixing screws. (Ø4 ×8, 2 pcs) 3) Pull down the cover and shift it to the fan motor side to remove it. **2. Attachment** 1) Insert the cover along edge of the electrical control box and match the projection inside of the fixing screw with hole of the cover. 2) Tighten the fixing screws. (Ø4 × 8, 2 pcs)	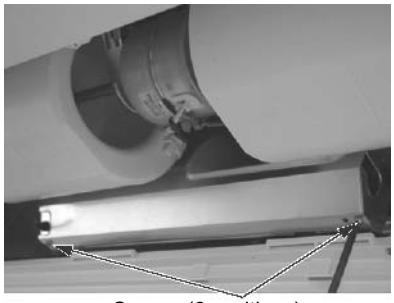 Screws (2 positions) 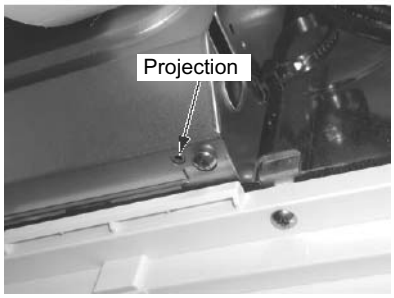
3	Adjust cap	**1. Detachment** 1) Perform work of procedure **1.** of **1**. 2) Take off fixing screws. (Ø4 × 12, 2 pcs) 3) Hold handle of the cap, and then slide it toward suction side to remove cap. **2. Attachment** 1) Catch on the top claw and slide it toward discharge side for attachment. 2) Fit the fixing screws. (Ø4 × 12, 2 pcs)	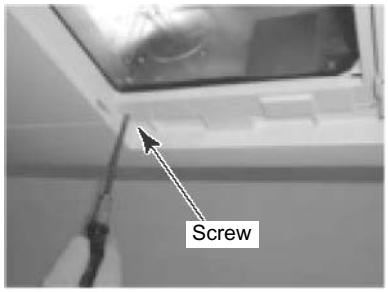 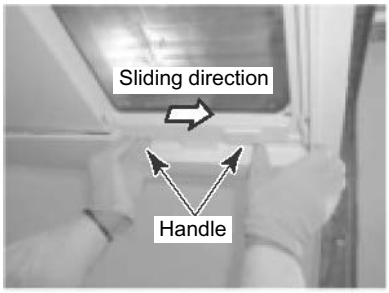

No.	Part name	Procedure	Remarks
4	Ceiling panel	**1. Detachment** 1) Perform works of procedures **1.** of **2** and **1.** of **3**. 2) Remove louver connector (CN33 White, 5P) connected to the control P.C. board, and then take off the lead wire from the clamp. **NOTE** When removing the connector, unlock the lock of the housing. 3) Take off screws fixing the ceiling panel. (M5 × 4 pcs, M4 × 2 pcs) **NOTE** Be sure to open the screw cap before taking off the fixing screw (M4) at the center of the discharge port. 4) While pulling down the ceiling panel by pushing the knob of hook (movable) at right side of the panel toward inner side, remove the hook (movable) and also the hook (movable) at left side to pull down the ceiling panel by lifting the left side of the panel and sliding toward outside. **2. Attachment** 1) Hook the hooks at both sides of the ceiling panel to the indoor unit. 2) Fit the fixing screws. (M5 × 4 pcs, M4 × 2 pcs) **NOTE** Be sure to close the screw cap after screwing the fixing screw (M4) at the center of the discharge port. 3) Connect the louver connector of the ceiling panel to the connector (CN33 White, 5P) of the control P.C. board.	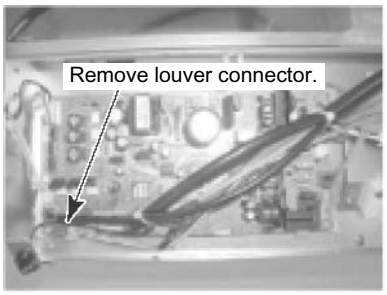 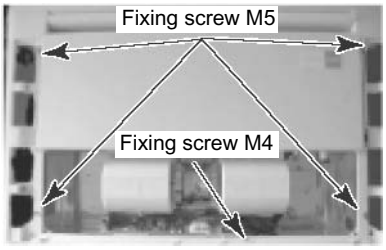 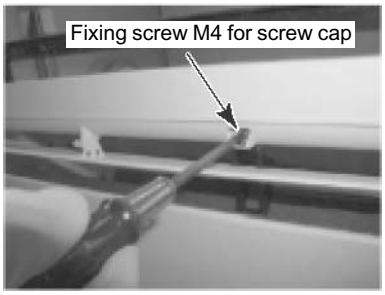 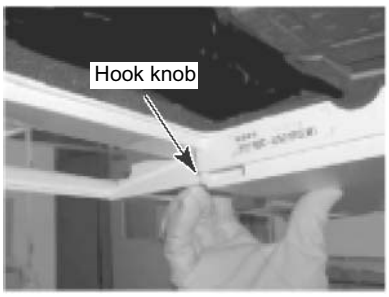

No.	Part name	Procedure	Remarks
5	Electrical control box	**1. Detachment** 1) Perform work of procedure **1.** of **2**. 2) Take off the fixing screws. (Ø4 × 8, 4 pcs) 3) Remove the cord clamp on the ceiling surface, pull the electrical control box downward, and then hook the hooking claw at the rear side to square hole of the panel. **2. Attachment** 1) Take off the hook at the rear side of the electrical control box. 2) Return the electrical control box at the original position, ant then fit the fixing screws. (Ø4 × 8, 4 pcs) 3) Using cord clamp at the ceiling surface, fix the lead wires as before.	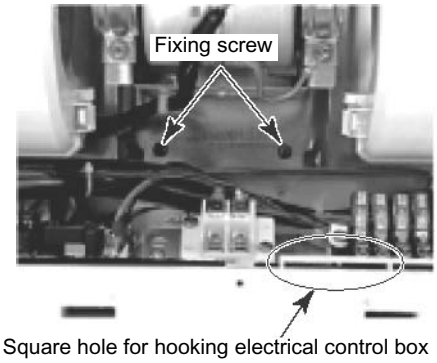 Square hole for hooking electrical control box 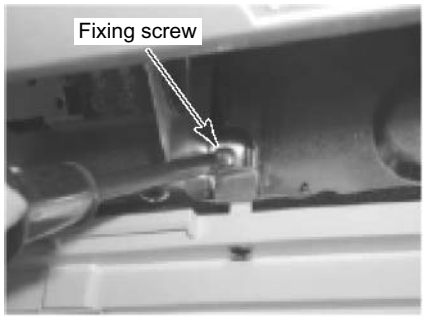 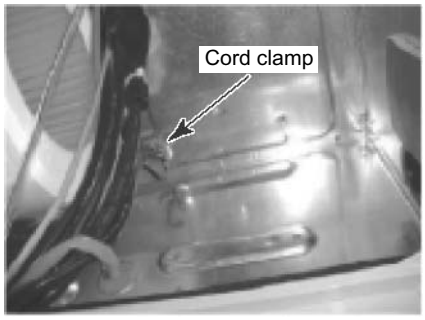 Hooking section 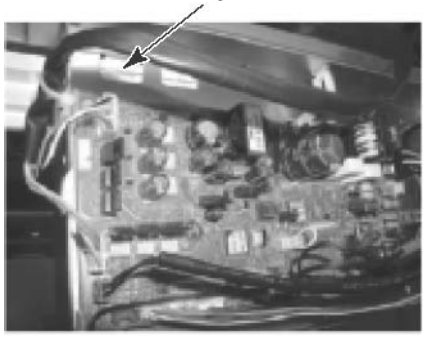

No.	Part name	Procedure	Remarks
6	Control P.C. board	**1. Detachment** 1) Perform work of procedure **1.** of **5**. 2) Remove connectors connected from the control P.C. board to other parts. **NOTE** Be sure to unlock the lock of the housing before removing the connector. CN33: Louver motor (5P: White) CH34: Float switch (3P: Red) CN41: Remote controller terminal block (3P: Blue) (Screws of terminal block: 4P) CN67: Power supply terminal block (2P: Black) (Screws of terminal block: 2P) CN68: Drain pump (2P: Blue) CN82: PMV (6P: Blue) CN100: TC1 sensor (3P: Brown) CN101: TC2 sensor (2P: Black) CN102: TCJ sensor (2P: Red) CN104: Room temp. Sensor (2P: Orange) CN333: Fan motor power supply (5P: White) CN334: Fan motor position detection (5P: White) 3) Unlock the locks of the card edge spacers (7 positions), and then remove the control P.C. board. **2. Attachment** 1) Fix the control P.C. board to the card edge spacers (7 positions). 2) Connect the connectors disconnected in item 1 as before. **NOTE** For connectors, check there is no missing or contact failure.	Card edge spacer 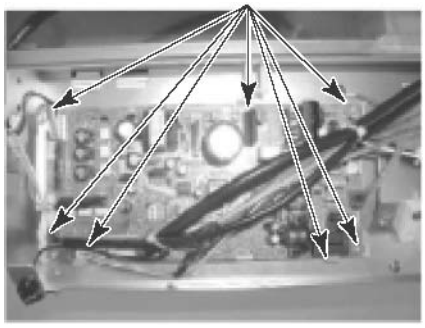 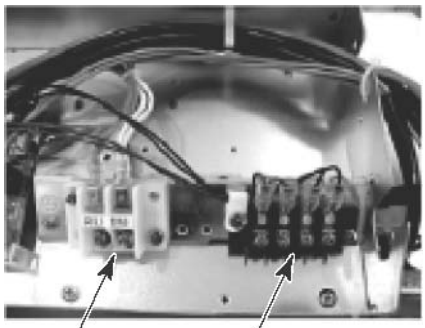 Power supply terminal block 2P Remote controller terminal block 4P

No.	Part name	Procedure	Remarks
7	Fan motor fan	**1. Detachment** 1) Perform work of procedure **1.** of **2**. 2) Remove clamps of the lead wires which are connected to the following connectors of the control P.C. board. **NOTE** Be sure to unlock the lock of the housing before removing the connector. CN333: Fan motor power supply (5P: White) CN334: Fan motor position detection (5P: White) 3) Remove the hooking claws at both sides of the fan case (lower) and remove the fan by pulling out it from the partition board. 4) Loosen hexagon socket head screw of the fan. 5) Remove screws of the fixing bracket while holding the fan motor, and then remove the fan and the fan motor. Earth wires of the motor are tightened together. **2. Attachment** 1) Insert the fan into the shaft of the motor and screw the fan motor with the fixing bracket. (Tighten earth lead wires of the motor together as before.) For the boss of the fan, attach hexagon socket head screw to shaft of the motor matching the marked position of the shaft with groove of the fan. **NOTE** Match the rotation direction of the motor with that of the fan, and fix the fan motor so that the motor lead section comes to the piping side referring to the right photo. 2) Determine the position so that the fan locates at the center against the fan case (upper), and then fix the fan with hexagon socket head screw. **NOTE** For fixation, use a torque wrench and tighten with 4.9 N•m or more. 3) Mount the fan case (lower) as before, and check the fan smoothly rotates without contacting with fan case. 4) Connect the connectors disconnected in procedure **1**. 5) Fix parts as before in order of Electric parts cover → Air intake grille.	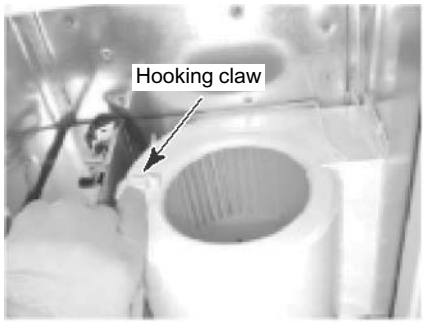 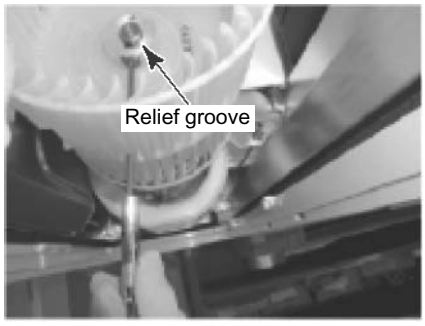 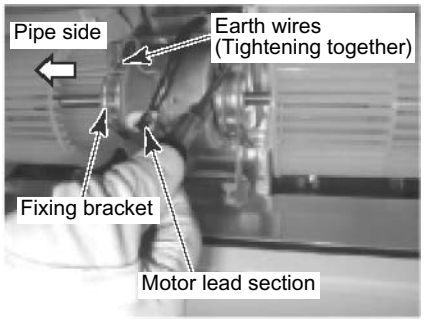 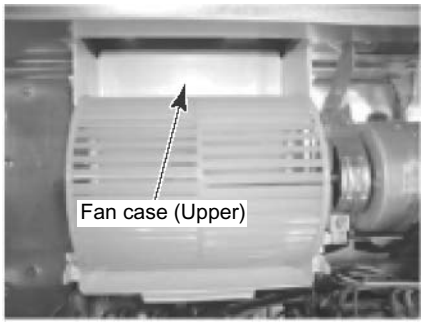

No.	Part name	Procedure	Remarks
8	Drain pan	**1. Detachment** 1) Perform work of procedure **1.** of **4**. 2) Remove the drain cap, and then drain the drain water accumulated in the drain pan. **NOTE** When removing the drain cap, be sure to catch drain water using bucket, etc. 3) Take off screws fixing the drain pan. (Ø4 × 8, 2 pcs) 4) Remove the drain pan while lowering the discharge side. **2. Attachment** 1) Fix parts as before in order of Drain cap → Drain pan → Ceiling panel → Electric parts cover → Adjust cover → Air intake grille.	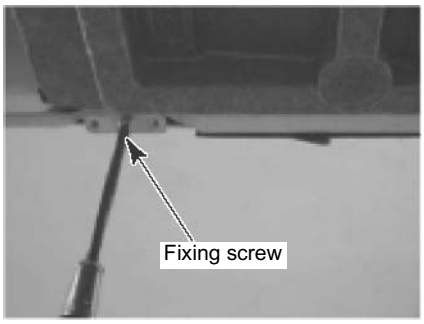 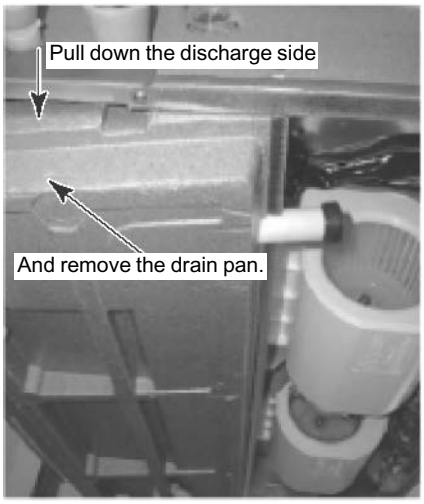

No.	Part name	Procedure	Remarks
9	Drain pump	**1. Detachment** 1) Perform work of procedure **1.** of **8**. 2) Remove clamps of the lead wires connected to the following connectors of the control P.C. board. **NOTE** Be sure to unlock the lock of the housing before removing the connector. CN34: Float switch (3P: Red) CN68: Drain pump (3P: Blue) 3) Pick the hose band and shift band from pump connecting part to remove the drain hose. 4) Take off screws fixing the drain pump assembly. (Ø4 × 8, 3 pcs) 5) Pull out the drain pump assembly toward discharge side to remove it. **2. Attachment** 1) Fix the drain pump assembly as before. 2) Connect the drain hose and attach the hose band. **NOTE** Insert the drain hose completely up to the end of the pump connecting part, and then attach band at the white mark position of the hose. 3) Insert the connectors to the control P.C. board as before. 4) Fix parts as before in order of Drain cap → Drain pan → Ceiling panel → Electric parts cover → Adjust cover → Air intake grille.	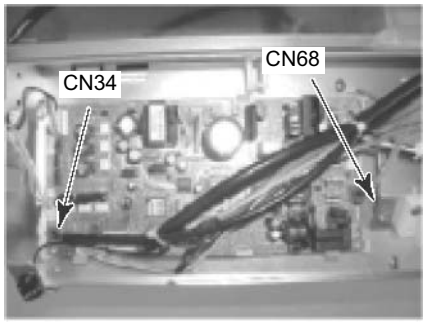 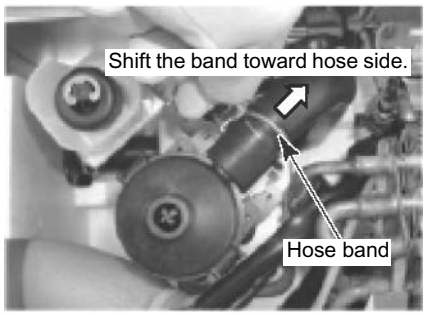 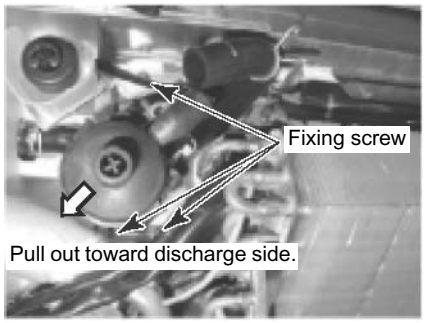

No.	Part name	Procedure	Remarks
10	PMV motor	**1. Detachment** 1) Perform work of procedure **1.** of **8**. 2) Remove the relay connector of PMV motor. (As the relay connectors are connected in the vinyl tube, cut off the banding band fixing the both ends of the tube and shift the tube to remove relay connector.) 3) Peel off the butyl rubber adhered to the pulse motor valve (PMV) body until PMV body appears, and remove PMV motor after loosening the nut fixing PMV motor with double spanners. **2. Attachment** 1) Mount PMV motor and the relay connector as before. **NOTE** Control tightening torque of PMV body and PMV motor with 7.84 ± 0.98 N•m.	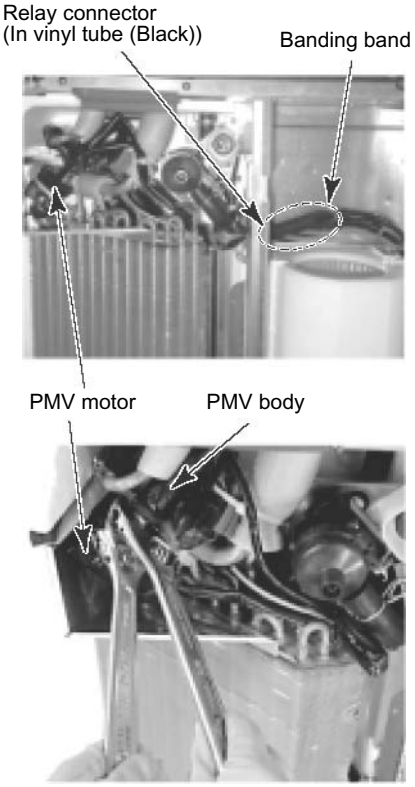
11	Heat exchanger	**1. Detachment** 1) Recover the refrigerant gas. 2) Remove the refrigerant pipe of the indoor unit. 3) Perform work of procedure **1.** of **8**. 4) Remove the pipe cover by taking off fixing screws of the cover. (Ø4 × 8, 2 pcs) 5) Remove the clamp which fixes TC1 sensor, TC2 sensor and TCJ sensor, and then pull out the sensors from the holder. 6) Remove the heat exchanger by taking off fixing screws of the partition board while holding the heat exchanger. (Ø4 × 8, 4 pcs) **2. Attachment** 1) Fix parts as before in order of Heat exchanger → Sensors → Pipe cover → Drain cap → Drain pan → Ceiling panel → Electric parts cover → Adjust cover → Air intake grille. 2) Connect the refrigerant pipe as before, and then perform vacuuming.	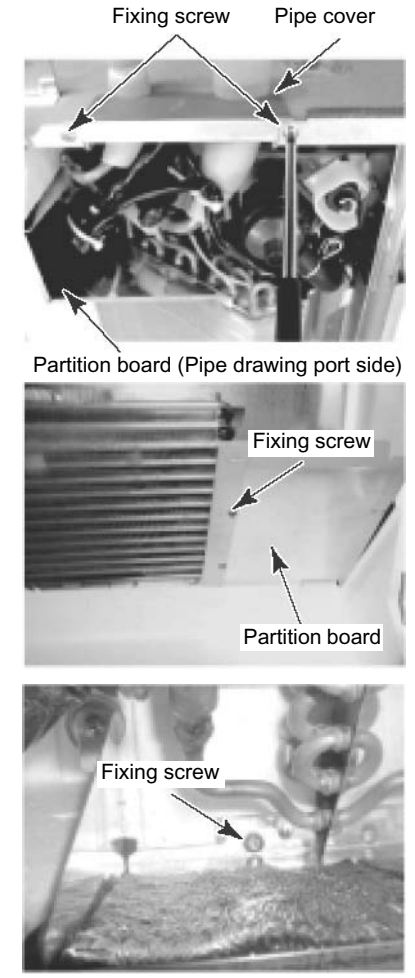

8-2. Compact 4-way cassette

MMU-AP0054MH∗, 0074MH∗, AP0094MH∗, AP0124MH∗, AP0154MH∗, AP0184MH∗

Ceiling panel: RBC-UM11PG(W)E

Preparing work:

1. **Before work, be sure to stop the power supply of the air conditioner and turn off switch of the power supply breaker. (Otherwise an electric shock may be caused.)**
2. **Be sure to put on the gloves when working; otherwise an injury may be caused with parts sharp edges etc.**

No.	Part name	Procedure	Remarks
1	Air intake grille	**1. Detachment** 1) Loosen the fixing screw. 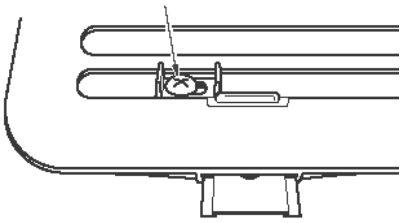 2) Slide the fixing bracket toward the outside. 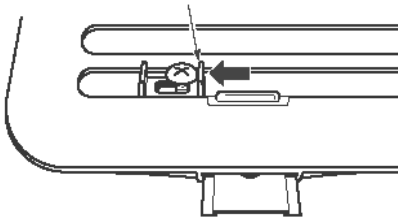 3) Slide the air intake grille buttons to detach the air intake grille from the ceiling panel. Lower the grille slowly whilst holding. 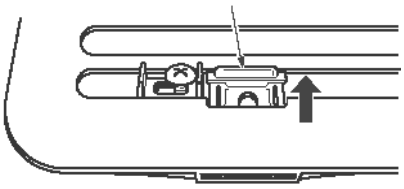 4) Slide hooks (2 positions) of the air intake grille to inner side, and then hang down the air intake grille. 5) Take off the strap that connects the panel and the air intake grille, and then lift up shaft of the air intake grille to remove the air intake grille.	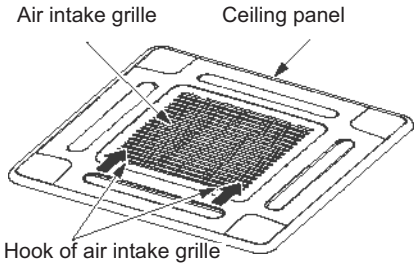 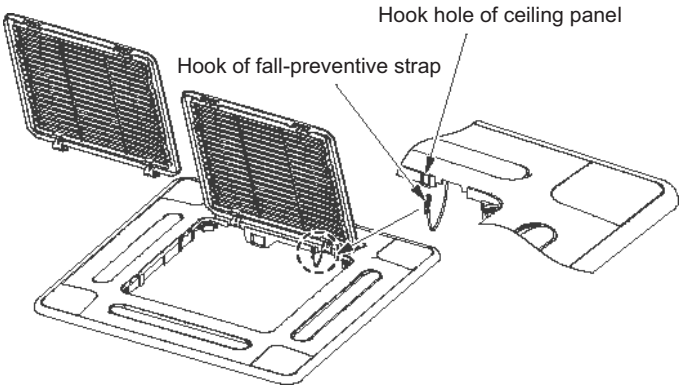 **2. Attachment** 1) Hook shaft of the air intake grille to the panel. 2) Hook strap of the air intake grille to the original position of the panel. 3) Close the air intake grille and slide the hooks outward to fix it. 4) Slide the fixing bracket and fixing screw.

No.	Part name	Procedure	Remarks
2	Electric parts cover	**1. Detachment** 1) Perform work of procedure **1**-1. 2) Take off screws (Ø4 × 10, 3 pcs.) fixing the electric parts cover. 3) Remove the electric parts cover from the temporary hanging hook of the electric parts cover, and then open the cover. **2. Attachment** 1) Close the electric parts cover and hook the cover hole to the temporary hanging hook. 2) Tighten the fixing screws. (Ø4 × 10, 3 pcs.)	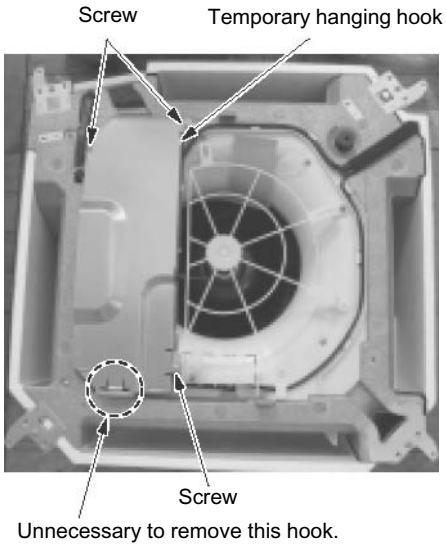
3	Adjust corner cover	**1. Detachment** 1) Perform work of procedure of **1**-1. 2) Turn clockwise screws (4 positions) at the suction port corner until adjust corner cover rises up. **NOTE** When you work, keep the torque at below 12N•m. Do not use an electric screwdriver; otherwise the mechanism of adjust corner cover may be damaged and not be removed. 3) Pull downward the risen-up part of adjust corner cover and remove it. 4) Remove the strap of adjust corner cover. **2. Attachment** 1) Attach the strap of adjust corner cover to the panel, hook claws of adjust corner cover to the panel corner, and then push the opposite side into the panel. 2) Turn screws (4 positions) of the suction port corner counterclockwise until bump between adjust corner cover and panel disappears. **NOTE** When you work, keep the torque at below 12N•m. Do not use an electric screwdriver; otherwise the mechanism of adjust corner cover may be damaged and not be removed.	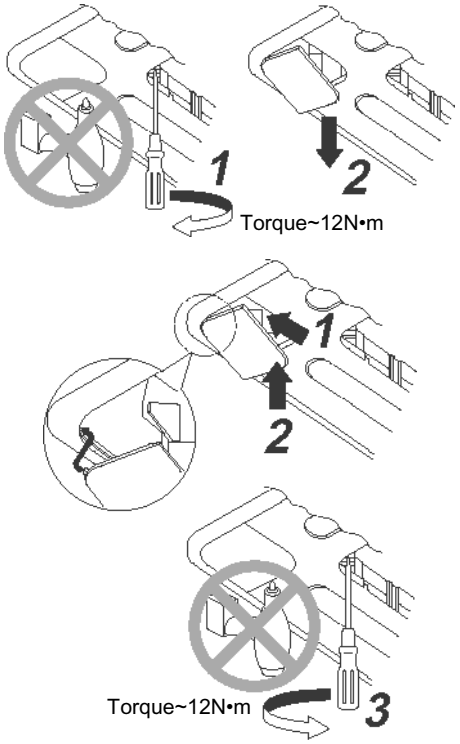

No.	Part name	Procedure	Remarks
4	Ceiling panel	**1. Detachment** 1) Perform works of procedure **1**-1-, **2**-1, and **3**-1. 2) Remove the louver connector (CN33, White, 5P) connected to the control P.C. board and then take off the lead wire from the clamp. **NOTE** Remove the connectors after unlocking the lock of the housing. 3) Take off screws (M5, 4 pcs.) fixing the ceiling panel. 4) Push the temporary bracket to inner side to remove the ceiling panel. **2. Attachment** 1) Hook the panel to the temporary bracket of the drain pan of the main body. **NOTE** The panel has directionality. Therefore mount the panel according to the temporary bracket and the bracket mounting position. 2) Tighten the fixing screws. (M5, 4 pcs.) 3) Connect louver connector of the ceiling panel to the connector (CN33, White, 5P) of the control P.C. board.	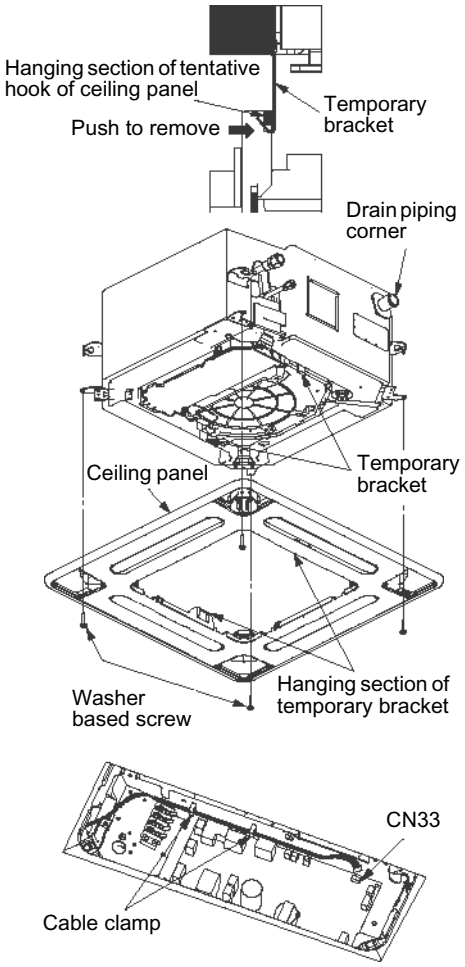

No.	Part name	Procedure	Remarks
5	Control P.C. board		

1. Detachment

1) Perform works of procedure **1**-1- and **2**-1.
2) Remove the connectors connected from the control P.C. board to other parts.

CN33: Louver motor (5P, White)
CN34: Float switch (3P, Red)
CN41: Terminal block of remote controller (3P, Blue)
CN40: Terminal block of crossover between inside and outside (2P, Blue)
CN68: Drain pump (3P, Blue)
CN67: Terminal block of power supply (3P, Black)
CN100: TC1 sensor (3P, Brown)
CN101: TC2 sensor (2P, Black)
CN102: TCJ sensor (2P, Red)
CN104: Room temp sensor (2P, Yellow)
CN82: PMV (6P, Blue)
CN333: Fan motor power supply (5P, White)
CN334: Fan motor position detection (5P, White)

NOTE

Remove the connectors after unlocking the lock of the housing.

3) Unlock the lock of the card edge spacer (6 positions) and then remove the control P.C. board.

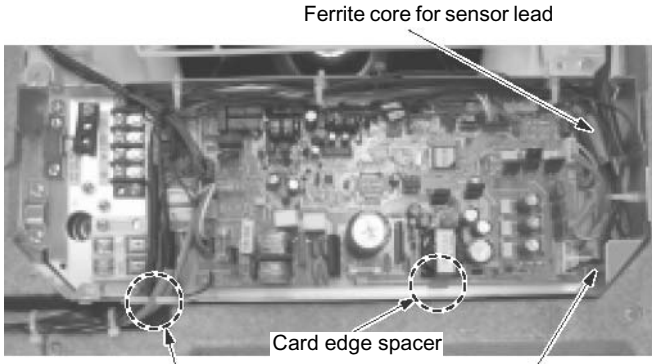

2. Attachment

1) Fix the control P.C. board to the card edge spacer. (6 positions)
2) Connect the connectors as original before being removed in item 1.

NOTE

For drawing of each wire and position of ferrite core, perform wiring same as those before removing. If there is incomplete drawing of wire, short or water leakage of the parts may be caused.

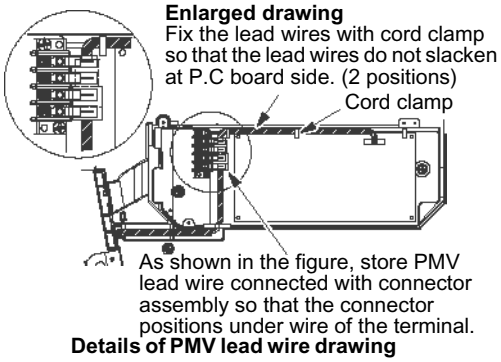

Details of PMV lead wire drawing

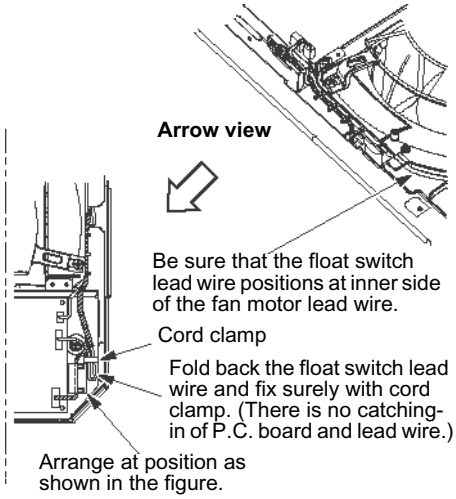

Details of fan motor lead wire drawing

Fix the sensor lead wires firmly with the cord clamp so that they do not touch with the caution plate of the terminal block and they do not slacken at P.C. board side. (3 positions)
Arrange the clamp at the position as shown in the figure.

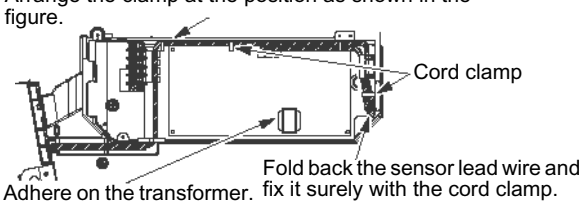

Details of sensor lead wire drawing

No.	Part name	Procedure	Remarks
6	Electrical control box		

1. Detachment

1) Perform works of procedure **1**-1- and **2**-1.
2) Remove connectors of the lead wire connected to the following connectors of the control P.C. board.

CN33: Louver motor (5P, White)
CN34: Float switch (3P, Red)
CN68: Drain pump (3P, Blue)
CN100: TC1 sensor (3P, Brown)
CN101: TC2 sensor (2P, Black)
CN102: TCJ sensor (2P, Red)
CN82: PMV (6P, Blue)
CN333: Fan motor power supply (5P, White)
CN334: Fan motor position detection (5P, White)

NOTE

Remove the connectors after unlocking the lock of the housing.

3) Remove each lead wire from cord clamps in the electrical control box.
4) Remove the power supply wiring, remote controller wiring, and crossover wiring.
5) Take off screws (Ø4 × 10, 2 pcs.)

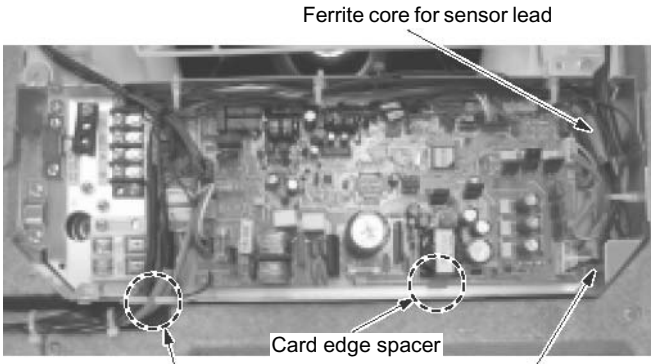

2. Attachment

1) Tighten screws (Ø4 × 10, 2 pcs.) fixing the electrical control box.
2) Connect the connectors as original before being removed in item 1.
3) Perform power supply wiring, remote controller wiring, and crossover wiring between inside and outside.

NOTE

For drawing of each wire and position of ferrite core, perform wiring same as those before removing. If there is incomplete drawing of wire, short or water leakage of the parts may be caused.

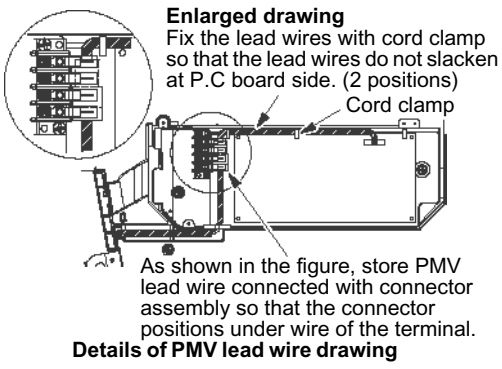

Details of PMV lead wire drawing

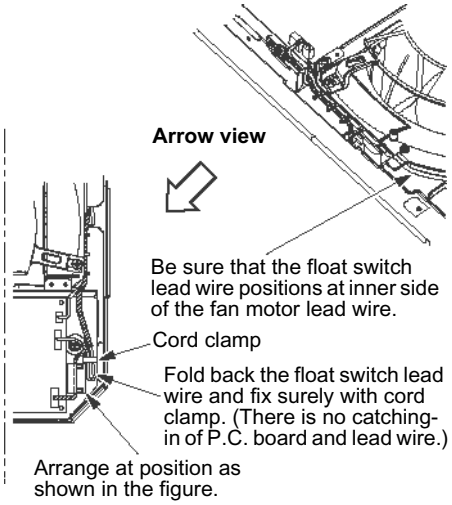

Details of fan motor lead wire drawing

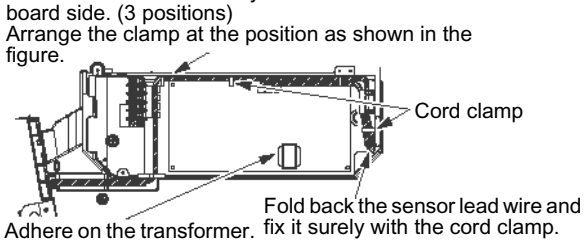

Details of sensor lead wire drawing

No.	Part name	Procedure	Remarks
7	Fan guard	**1. Detachment** 1) Perform work of procedure **1**-1. 2) Take off screws fixing the fan guard. (Ø4 × 10, [Screws for plastic molding] 4 pcs.) **NOTE** The specification of fixing screws for the fan guard differs from those of other fixing screws. Therefore keep them separately from other screws. **2. Attachment** 1) Attach screws for fixing the fan guard. (Ø4 × 10, [Screws for plastic molding] 4 pcs.)	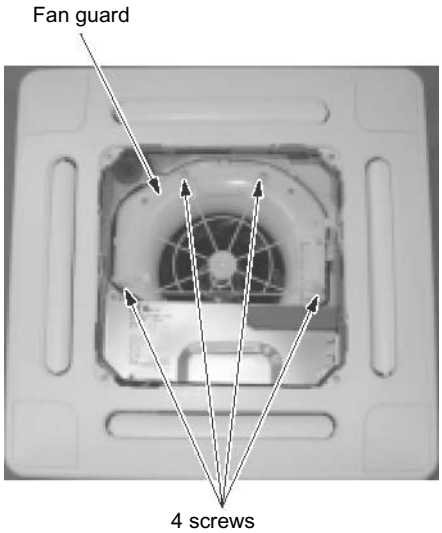
8	Bell mouth	**1. Detachment** 1) Perform work of procedure **6**-1. 2) Take off the lead wires of the drain pump, float switch, and fan motor from the bell mouth. 3) Take off fixing screws of the bell mouth. (Ø4 × 10, 4 pcs.) **2. Attachment** 1) Mount the bell mouth with screws. (Ø4 × 10, 4 pcs.) 2) Perform wiring as original before being removed. **NOTE** Pinch lead wire of the drain pump and float switch with lead wire fixing claws of the bell mouth and perform wiring along the guide.	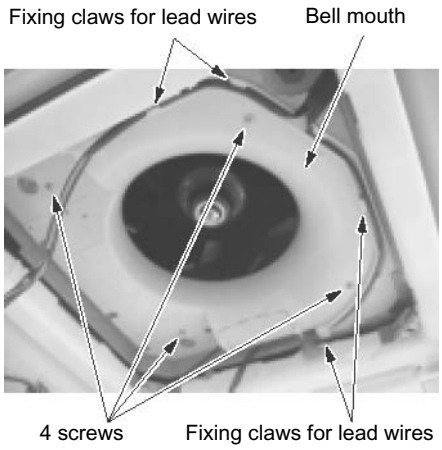
9	Turbo fan	**1. Detachment** 1) Perform work of procedure 8-1. 2) Take off the nut (M6 nut 1 pc.) of the turbo fan. **NOTE** Use a box wrench for attachment and detachment of the turbo fan. If using a monkey wrench etc, the other parts may be damaged in work. **2. Attachment** 1) Insert the turbo fan into the fan motor so that boss of the turbo fan matches with cut surface of the fan motor, and then tighten it with nut. **NOTE** Tightening torque of turbo fan: 5.9 ± 0.6N•m Apply looseness-preventing agent to the nut after tightening.	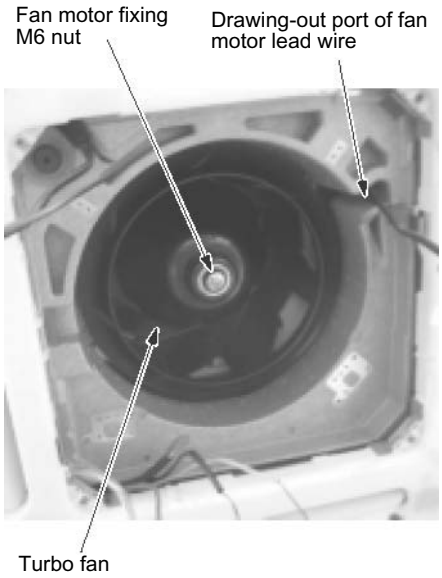

No.	Part name	Procedure	Remarks
10	Fan motor	**1. Detachment** 1) Perform work of procedure **9**. 2) Take off screws fixed with lead holding bracket of the fan motor. (Ø4 × 10, 2 pcs.) 3) Open wiring holding part of the fan motor lead holding bracket and then take off the fan motor lead wire from the bracket. 4) Take off fixing nuts for the fan motor to remove the fan motor. (M 3 pcs.) **NOTE** Use a box wrench for attachment and detachment of the fan motor fixing nuts; otherwise contact or damage for other parts may be caused.	Fixing nut for fan motor 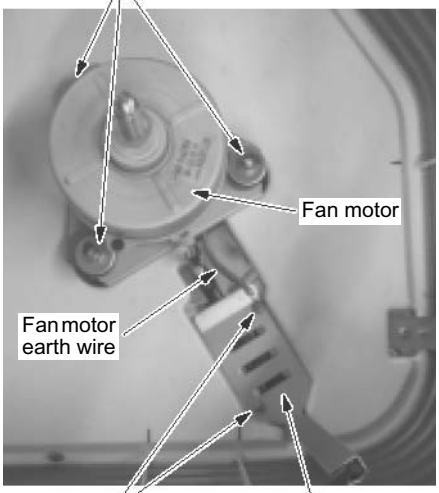
		2. Attachment 1) Mount the fan motor with the fixing nuts. **NOTE** Tightening torque of turbo fan: 5.9 ± 0.6 N•m Apply looseness-preventing agent (as paints) to the nut after tightening. 2) Attach the fan motor lead wire holder. **NOTE** • For the fan motor lead wire, fix the lead wire holding bracket along concave part of the ceiling panel. (There is no catch-in of lead wire and ceiling panel.) • When fixing the lead wire bracket, tighten fan motor earth together with the lead wire. • For this work, do not use an electric screwdriver. • Take note the damage of earth terminal.	
		3) Bend the lead wire holding part and fix the fan motor lead wire. **NOTE** Be sure that the lead wire does not come to contact with the heat exchanger.	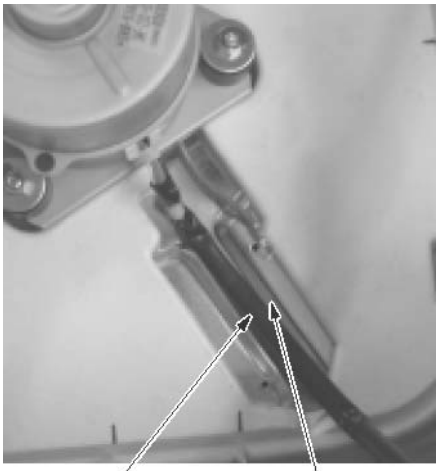

No.	Part name	Procedure	Remarks
11	Drain pan	**1. Detachment** 1) Perform works of procedure **4**-1 and **8**-1. 2) Remove the drain cap and extract drain water accumulated in the drain pan. **NOTE** When removing the drain cap, be sure to receive drain water with a bucket, etc. 3) Take off screws fixing the drain pan to remove the drain pan. (Ø4×10, 4 pcs.) **2. Attachment** 1) Insert the drain cap into the drain pan. **NOTE** Put a stick or others into hole at center of the drain cap, and then insert the drain cap until it strikes on the socket of the drain pan. 2) Draw each lead wire to the correct positions, and then insert the drain pan into the main unit. **NOTE** Draw lead wires of the drain pump and the float switch along the guide of the cabinet. Insert the drain pan along the guides of sensors (TC1, TC2, TCJ) and PMV lead wire. The drain pan and each lead wire are not caught in; otherwise water leakage may be caused. 3) Fix the drain pan with screws. (Ø4 × 10, 4 pcs.)	2 screws 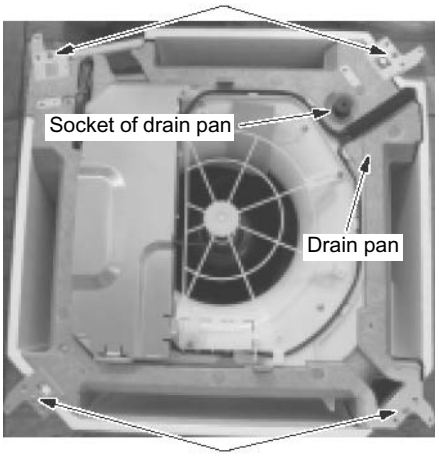 2 screws 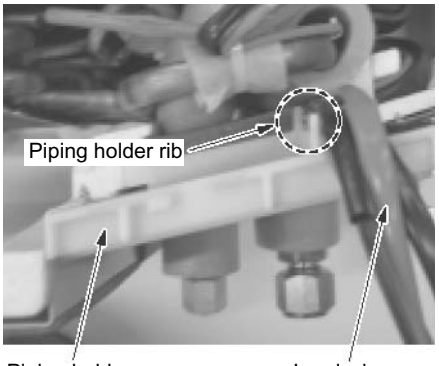
12	Drain pump assembly	**1. Detachment** 1) Perform work of procedure **11**-1. 2) Pick up the hose band and slide it from the pump connecting part to remove the drain hose. 3) Take off screws (Ø4 × 10, 3 pcs.) fixing the drain pump assembly, and then move hooking claw (1 position) of the main body from the drain pump assembly to remove the drain pump assembly. **2. Attachment** 1) Fix the drain pump assembly as original. **NOTE** For fixing, use a hooking claw (1 position) and screws (3 positions). When screwing, be sure not to run on the hooking claw at main body side. 2) Mount the drain hose and the hose band as original. **NOTE** Insert the drain hose up to the end of pump connecting part, and then put the band at white marked position of the hose.	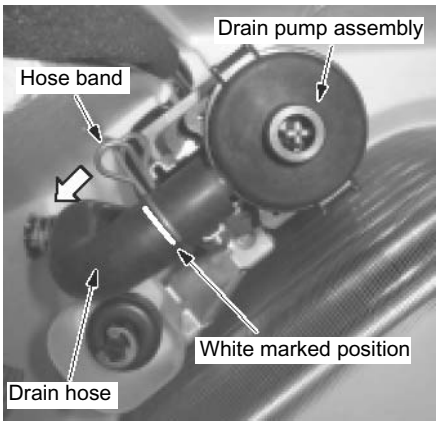 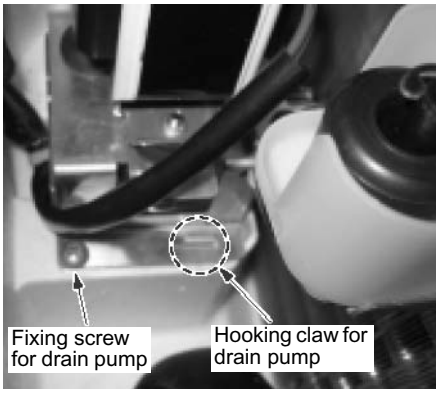

No.	Part name	Procedure	Remarks
13	PMV (Pulse Motor Valve)	**1. Detachment** 1) Perform work of procedure **11**-1. 2) Take off screws (Ø4 × 10, 3 pcs.) fixing the piping cover to remove the piping cover. 3) Cut off binding band that binds the PMV lead wires. 4) Peel butyl rubber of PMV a little and remove PMV motor with a spanner wrench. **NOTE** For attachment and detachment of PMV motor, use a 14 mm or 19 mm spanner wrench. **2. Attachment** 1) Mount PMV motor with a spanner wrench. **NOTE** PMV motor tightening torque: 7.84 ± 0.78N•m 2) Perform wiring of PMV and sensor lead as original. **NOTE** Arrange each wire as original. 3) Fix the piping cover with screws.	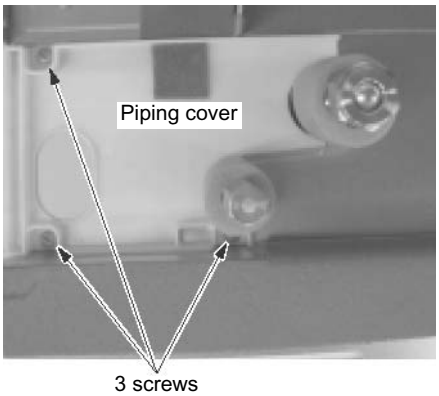 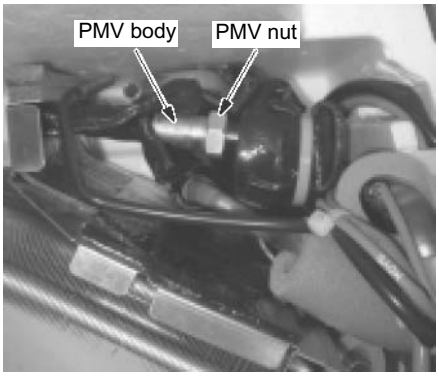

<Details of sensor lead wire drawing>

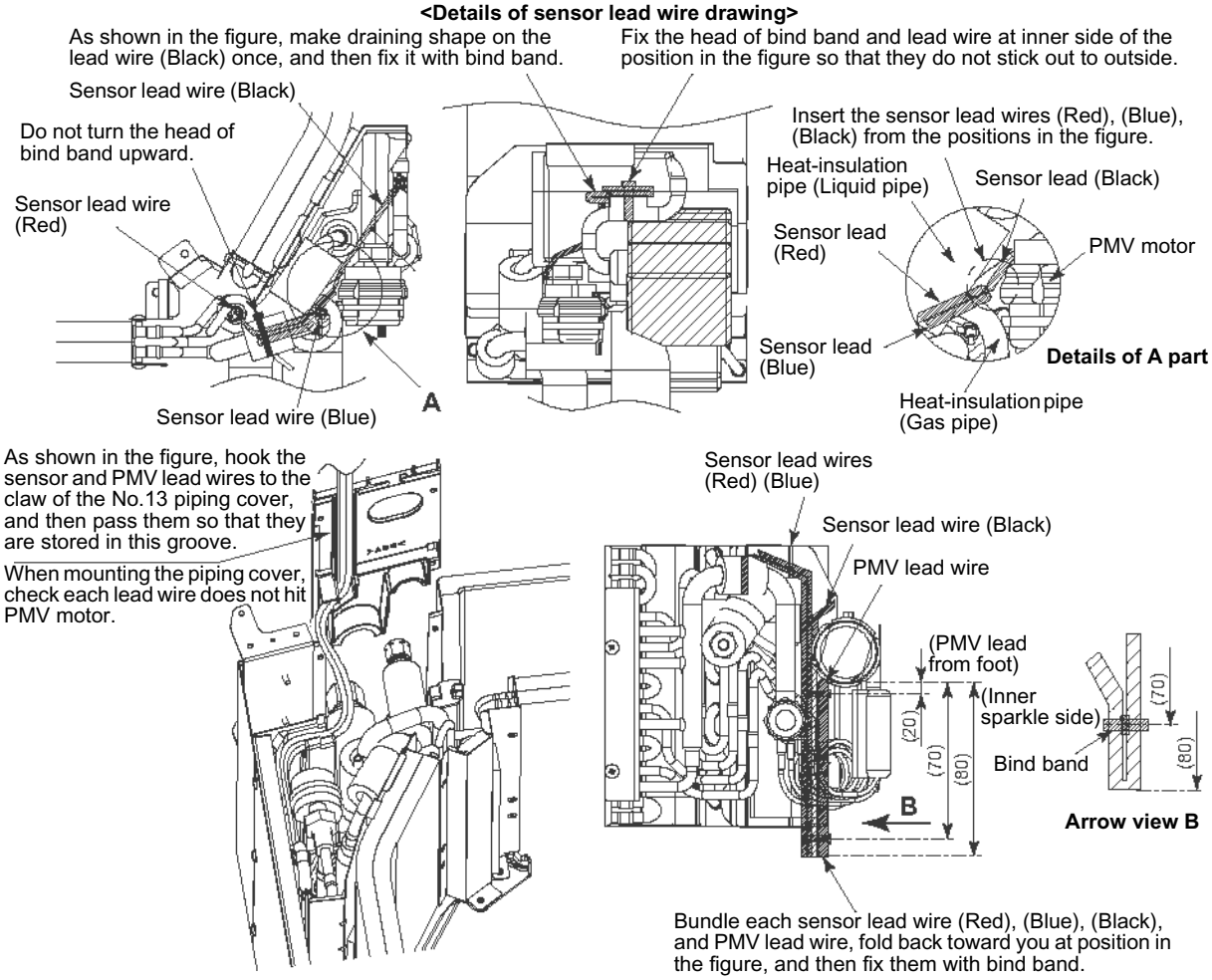

No.	Part name	Procedure	Remarks
14	Heat exchanger	**1. Detachment** 1) Recover refrigerant gas. 2) Remove the refrigerant pipe at indoor unit side. 3) Perform work of procedure **11**-1. 4) Take off screws (Ø4 × 10, 3 pcs.) fixing the piping cover to remove the piping cover. 5) While holding the heat exchanger, remove fixing band and fixing screws (Ø4 × 10, 3 pcs.) and then remove the heat exchanger. **2. Attachment** 1) Mount parts in order, heat exchanger → fixing band → piping cover → drain pan → bell mouth → electrical control box as original. **NOTE** Arrange wires as original. 2) Attach the removed connectors and wires as original. 3) Connect the refrigerant pipe as original, and then perform vacuuming.	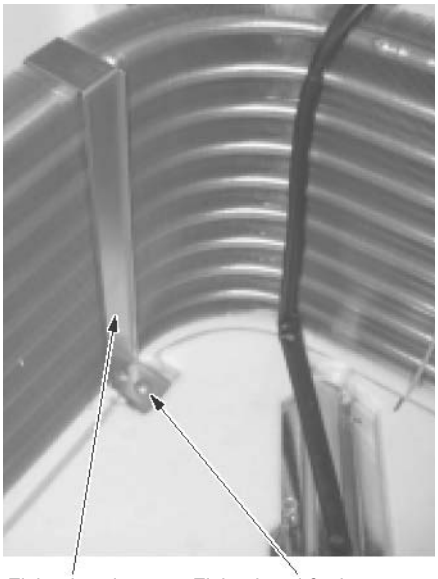 Fixing band Fixing band for heat exchanger 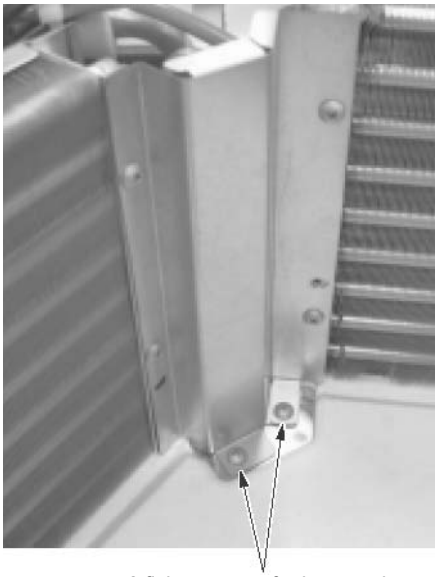 2 fixing screws for heat exchange

8-3. Slim duct

MMD-AP0054SPH∗, AP0074SPH∗, AP0094SPH∗, AP0124SPH∗, AP0154SPH∗, AP0184SPH∗

No.	Part name	Procedure	Remarks
		REQUIREMENT Be sure to put on gloves at working; otherwise an injury may be caused by parts, etc. Before replacement of the parts, be sure to stop operation of the air conditioner and turn off switch of the breaker.	
1		**1. Detachment** 1) Push knobs (3 positions) of the air filter hooks toward the arrow direction to remove the air filter. **2. Attachment** 1) Insert the air filter surely into the hooking grooves (4 positions) at the opposite side of the hooks, and then fix it to the original position. **NOTE** In case of sucking system from bottom side, installation direction is determined. Install the air filter so that hooks are aligned at discharge side.	**[In case of sucking system from rear side]** 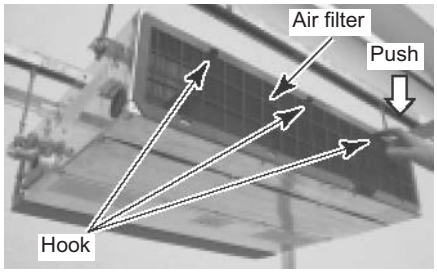 **[In case of sucking system from bottom side]** 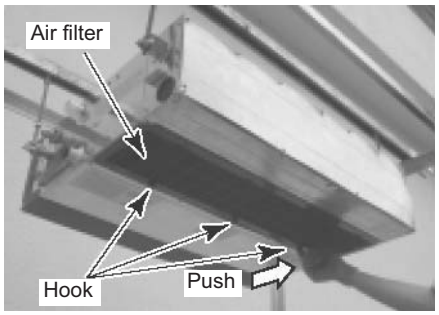
2	Plate inlet-A Plate inlet-B	**1. Detachment** 1) Take off fixing screws while holding the plate inlet-A with hands to remove it. (Sucking system from rear side: Ø4 × 10, 8 pcs) (Sucking system from bottom side: Ø4 × 10, 11 pcs) 2) Take off fixing screws while holding the plate inlet-B with hands to remove it. (Ø4 × 10, 6 pcs) **NOTE** Be careful that sheeting metal does not fall when removing the plate inlet. **2. Attachment** 1) Using the screws taken off in procedure **1.** 2) of **2**, attach the plate inlets in order of B A while holding them not to fall down.	**[In case of sucking system from rear side]** 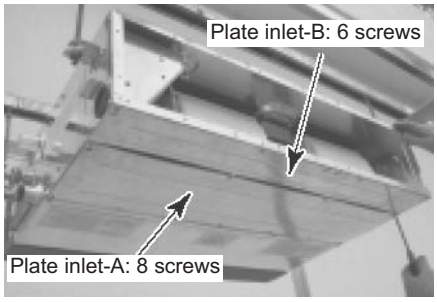 **[In case of sucking system from bottom side]** 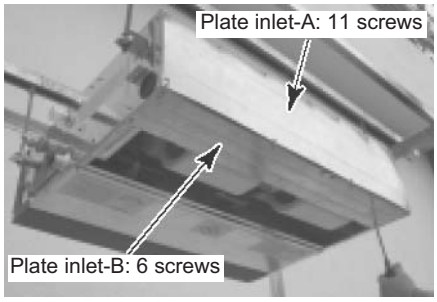

No.	Part name	Procedure	Remarks
3	E-cover	**1. Detachment** 1) Perform work **1.** of **2**. 2) Take off screws fixing E-cover, and then remove hooks of the hooking part by lifting up. (Ø4 × 10, 2 pcs) **2. Attachment** 1) Hang on E-cover to hooks of the hooking part so that it does not fall down. **NOTE** Be sure not to catch TA sensor in the E-cover; otherwise the equipment cannot operate correctly. 2) Using the screws taken off in procedure **1.** 2) of **3**, attach E-cover while holding it with hands without clearance. **NOTE** If there is clearance, dust may enter in the electrical control box.	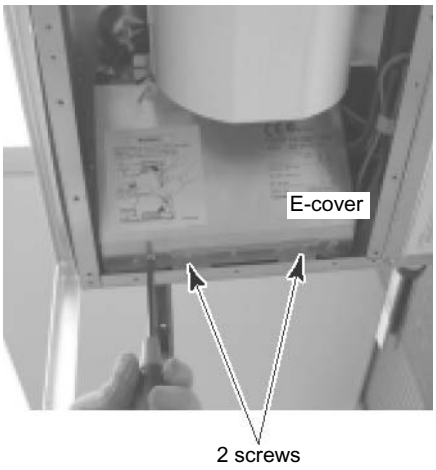 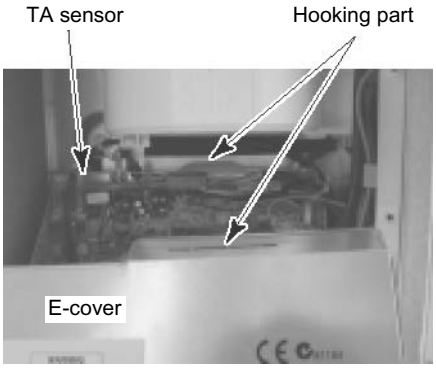
4	E-box	**1. Detachment** 1) Perform works **1.** of **2** and **1.** of **3**. 2) Remove clamps and tie wrap at upper part of the photo. (Drain pump incorporated model: 3 positions) (Natural drain model: 2 positions) 3) Take off screws fixing E-box. (Ø4 × 10, 2 pcs) E-box does not fall down under condition that screws are taken off. 4) Remove the E-box over sheeting metal which was fixed with screws. **2. Attachment** 1) Insert hooks of E-box into the hooking part of the main body. 2) Store E-box as before, and then attach it by using screws taken off in procedure **1.** 3) of **4**. **NOTE** Be sure to fix surely as before the lead wires of which clamps and tie wrap were taken off. **NOTE** Check that lead wires of the drain pump do not reach the fan so that they are not caught in the fan, and then fix them. (In case of drain pump incorporated model)	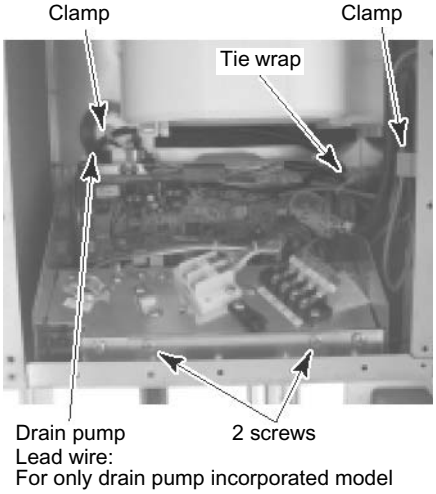

No.	Part name	Procedure	Remarks
5	P.C. board assembly	**1. Detachment** 1) Perform works **1.** of **2**, **1.** of **3**, and **1.** of **4**. 2) Disconnect connectors which are connected from P.C. board assembly to other parts. **NOTE** Unlock the lock of the housing to disconnect the connectors. CN40: Indoor / Outdoor communication (3P: Blue) Communication terminal block: 2P CN41: Remote controller terminal (3P: Blue) Remote controller terminal block: 2P CN67: Power supply terminal (3P: Black) CN100: TC1 sensor (3P: Brown) CN101: TC2 sensor (2P: Black) CN102: TCJ sensor (2P: Red) CN333: Fan motor power supply (5P: White) CN334: Detection of fan motor position (5P: White) Relay connector (CN82): PMV lead (6P: Blue) **(In case of drain pump incorporated model)** CN34: Float SW (3P: Red) CN68: Drain pump lead (3P: Blue) 3) Unlock the lock of the card edge spacer, and then remove P.C. board assembly. **2. Attachment** 1) Attach P.C. board assembly to the card edge spacer. 2) Using wires connect connectors as before, which were disconnected in procedure **1.** 2) of **5**. **NOTE** Check there is no missing or poor contact of the connectors.	P.C. board assembly 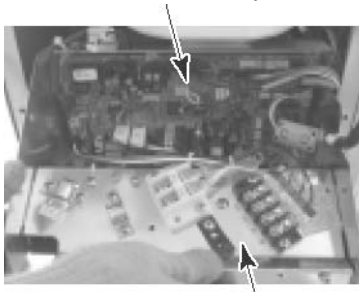 Terminal block
6	Multi blade fan case, fan lower case, fan upper case	**1. Detachment** 1) Perform work **1.** of **2**. 2) Take off hanging hooks at both sides of the lower fan case to remove fan lower case. 3) Remove the upper fan case while taking off hooks of fan upper case which are hooked to the partition board. 4) Loosen hexagonal hole screw of the multi blade fan to remove multi blade fan from the shaft. If necessary, remove multi blade fan and then remove fan upper case. **2. Attachment** 1) Determine the position so that multi blade fan positions at the center of the fan upper case, and then fix it with hexagonal hole screw. **NOTE** Arrange the multi blade fan so that screws position at the right side against the drain pan assembly. **NOTE** Fix multi blade fan with torque wrench 4.9 N•m or more. 2) Hook the lower fan case as before and attach it with hooks. **NOTE** Finally check whether the multi blade fan turns surely and smoothly or not.	Hanging hook Fan lower case Multi blade fan 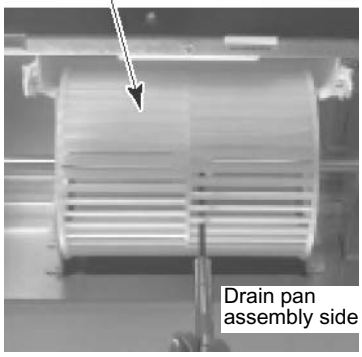 Drain pan assembly side Arrange the multi blade fan so that screws position at the right side against the drain pan assembly.

No.	Part name	Procedure	Remarks
7	Fan motor	**1. Detachment** 1) Perform works **1.** of **2**, **1.** of **3**, **1.** of **6**. 2) Remove lead wires which are connected to the following connectors of P.C. board assembly. **NOTE** Unlock locks of the housing, and then remove the connectors. CN333: Fan motor power supply (5P: White) CN334: Detection of fan motor (5P: White) Remove tie wrap which fixes lead wires. 3) Remove the noise filter from lead wire to detect fan motor position. 4) Take off screws of fan motor fixing bracket. Earth wires of the motor are tightened together. (Ø5 × 10, 2 pcs) Remove tie wrap which fixes the lead wires. 5) Remove fixing bracket of the fan motor by holding it with hands so that the fan motor does not fall down. **2. Attachment** 1) Mount the fan motor as before in order, Fan motor → Fixing bracket of fan motor → Noise filter → Lead wire process → E-cover. **NOTE** Check there is no missing or poor contact of the connectors. Check also that the multi blade fan turns surely and smoothly, and check togethertightening of motor earth.	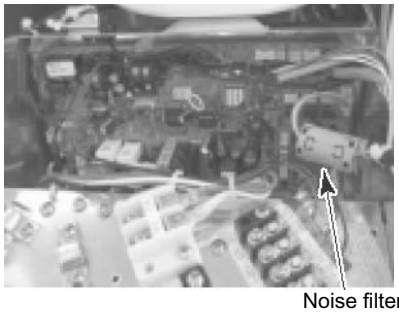 Noise filter 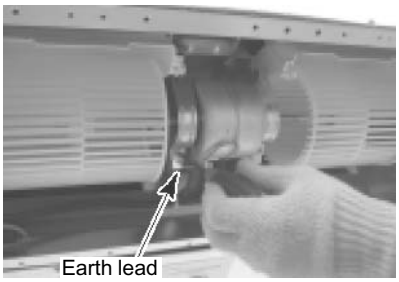 Earth lead
8	Under panel Drain pan assembly	**1. Detachment** 1) Take off the drain cap and drain the drain water accumulated in the drain pan assembly. In case of natural drain model, drain the drain water by taking off hose band and drain hose. **NOTE** When taking off drain cap and drain hose, be sure receive drain water in a bucket, etc. 2) Take off screws fixing the under panel while holding it to remove. (Ø4 × 10, 8 pcs) **NOTE** Be careful that sheeting metal does not fall when removing the under panel. 3) Pull out the drain pan assy. by holding handle at lower part. **NOTE** When pulling out the drain pan assy., never pull out the drain socket by drawing it with hands. If doing so, water leak may be caused. 4) Pull out it to some extent, lay hand on the bump at suction side, and then remove the drain pan assembly. **2. Attachment** 1) Hook and attach the drain pan assy. to the flange at discharge side, and then push in. 2) Using screws taken off in procedure **1.** 2) of **8**, attach under panel by holding with hands. 3) Attach drain cap, hose band, and drain hose as before, which were taken off in procedure **1.** 1) of **8**. **NOTE** Finally, be sure to check there is no water leakage from each attached part.	Drain cap or drain hose 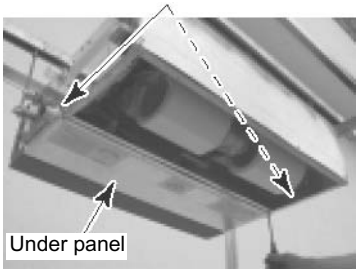 Under panel 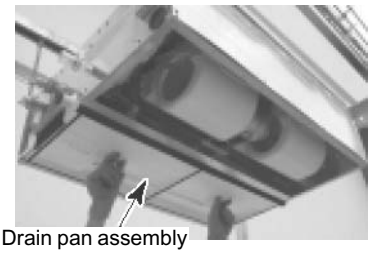 Drain pan assembly 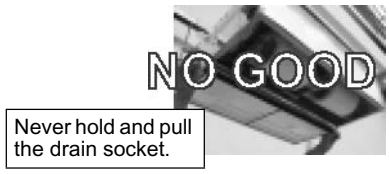 Never hold and pull the drain socket.

No.	Part name	Procedure	Remarks
9	Drain pump, Float switch, Drain hose	**1. Detachment** 1) Perform works in procedures **1.** of **2**, **1.** of **3**, **1.** of **8**. 2) Disconnect lead wires which are connected to the following connectors of P.C. board assembly. **NOTE** Unlock locks of the housing to remove the connectors. CN34: Float SW (3P: Red) CN68: Drain pump lead (3P: Blue) 3) Loosen hose band, remove cap of the drain hose, and take off screws while holding the sheeting metal on which float switch and drain pump are put on. Remove them with care that pipes are not damaged. (Ø4× 10, 2 pcs) **NOTE** If the pipes are damaged, refrigerant leak may be caused. Take out them with great care.	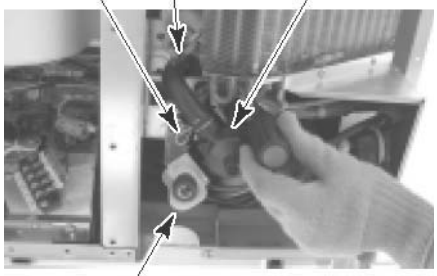
		2. Attachment 1) Attach ASSY sheeting metal which was removed in procedure **1.** 3) of **9** with care that pipes are not damaged, and then fix it with screws. 2) Insert the drain hose into the inlet of drain pump, and then fix it with hose band. Arrange handle of the hose band at contrary side of heat exchanger side and at direction remote from drain pan assembly. 3) Carry out wiring as before, and then perform work of procedure **2.** of **8**. **NOTE** Finally check whether they correctly operate or not.	
10	Evaporator assembly	**1. Detachment** 1) Recover refrigerant, and then remove refrigerant pipes at indoor unit side. 2) Perform works of procedures **1.** of **2**, **1.** of **3**, **1.** of **8**. Remove sensors. 3) Take off screws of the pipe holder, and remove the pipe holder. (Ø4 × 10, 2 pcs) 4) Take off screws of the heat exchanger support board (Pipe side), and remove the heat exchanger support board (Pipe side). (Ø4 × 10, 4 pcs) 5) Take off screws of the heat exchanger support board (Opposite side) which fixes terminal block of the evaporator assembly. (Ø4 × 10, 2 pcs) 6) Remove the evaporator assembly. **2. Attachment** 1) Fasten the parts as before in order, Evaporator assembly Pipe holder Set sensors Drain pan assembly Under panel. 2) Connect the refrigerant pipe as before, and then perform vacuuming.	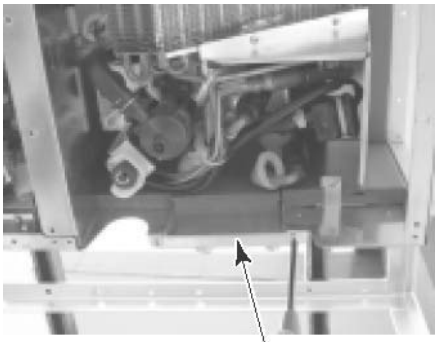 Heat exchanger support board (Pipe side) 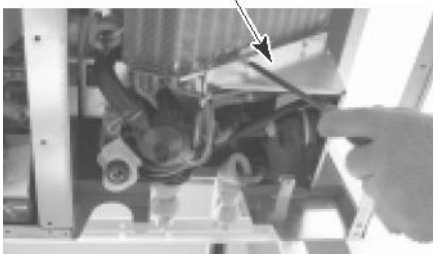

8-4. Concealed duct standard

MMD-AP0074BH*, AP0094BH*, AP0124BH*, AP0154BH*, AP0184BH*, AP0244BH*, AP0274BH*, AP0304BH*, AP0364BH*, AP0484BH*, AP0564BH*

No.	Component	Procedure	Remarks
1	Electrical control box	**1. Remove the air filter.** **2. Remove the two screws of the electrical control box cover.** **3. Remove the electrical control box cover.** **4. Remove the two screws of the electrical control box.** **5. Remove the electrical control box.** As the electrical control box is fixed by the hook on the right of the main unit, pull it up once and then toward you to release the hook. If necessary, remove the TA / TC / TCJ sensors.	Screws (For fixing the electrical control box and cover) Electrical control box cover 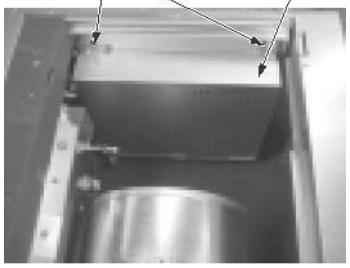 Screws (For fixing the electrical control box and main unit) Electrical control box 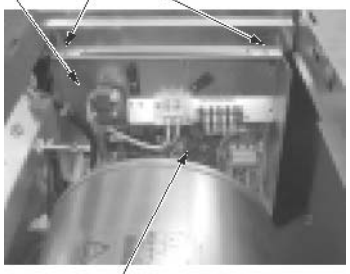 Hook (both sides)
2	Sirocco fan	**1. Remove the air filter.** **2. Remove the fan motor connector.** **3. Remove the hexagon screws fixing the fan assembly and main unit.** **4. Remove the fan assembly from the main unit. The fan assembly is fixed by three hooks on the upper part of the main unit. Pull it up once and then backward to remove the hooks.** **5. Remove the four screws fixing the fan case and cover.** **6. Remove the fan cover.** **7. Loosen the screws fixing the fan with a hexagon wrench.** **8. Pull the fan toward the fan case to remove the fan.**	Hexagon screws (For fixing the fan assembly and main unit) 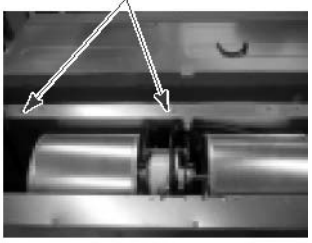 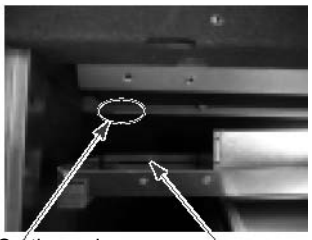 Hook (On the main unit) Hook (On the fan assembly) Fan case Fan fixing screw Fan Fan case cover 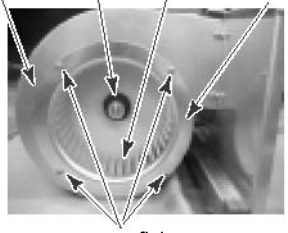 Fan case cover fixing screw

No.	Component	Procedure	Remarks
3	Fan motor	**1. Remove the fan.** **2. Remove the hexagon screws of the fan motor attachment board.** **3. Remove the fan motor attachment board. (2 positions)**	Fan motor attachment board Fan motor 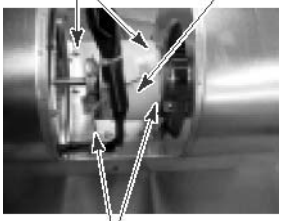 Fan motor attachment board fixing screw
4	Drain pan	**1. Lift down the indoor unit.** **2. Remove the bottom board fixing screws.** **3. Remove the bottom board from the main unit.** **4. Remove the screws of the main unit and drain pan fixing board.** **5. Remove the drain pan fixing board from the main unit.** **6. Pull up and remove the drain pan.**	Bottom board fixing screws 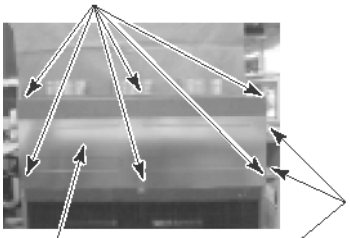 Bottom board Drain pan fixing board screws Drain pan fixing board screws 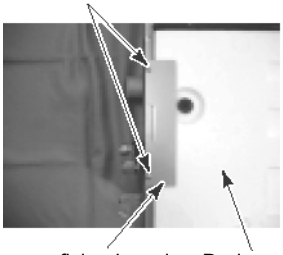 Drain pan fixing board Drain pan
5	Float switch	**1. Remove the drain pan.** **2. Remove the screw of the float switch fixing board.** **3. Remove the plastic nut fixing the float switch.** **4. Remove the float switch.**	Float switch Float switch fixing board 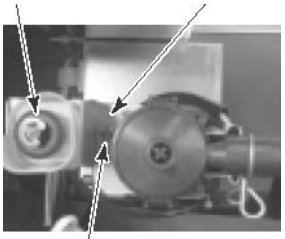 Float switch fixing screw Float switch (seen from the opposite side) 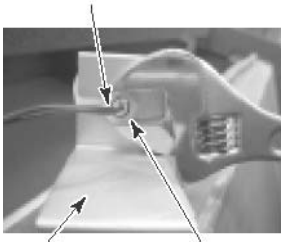 Float switch fixing board Plastic nut

No.	Component	Procedure	Remarks
6	Drain pump	**1. Remove the float switch and drain pan.** **2. Remove the screws of the main unit and drain pump fixing board. (3 positions)** **3. Remove the three screws of the drain pump and its fixing board.**	Drain pump Drain pump holder 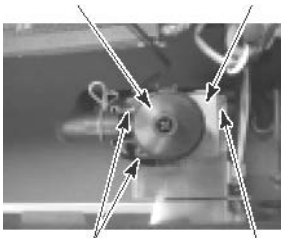 Drain pump holder fixing board screws Screws for drain pump and fixing board 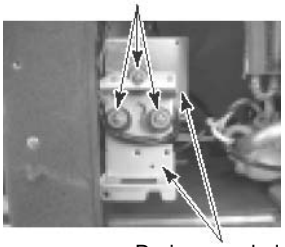 Drain pump holder
7	TC / TCJ sensor	**1. Remove the five screws fixing the check port cover on the right.** **2. Pull and remove the sensor from the sensor holder of the pipe.**	Check port cover (Right) 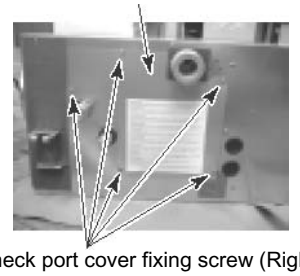 Check port cover fixing screw (Right)
8	Heat exchanger	**1. Lift down the indoor unit.** **2. Remove the drain pan.** **3. Remove the check port cover on the right.** **4. Remove the six screws fixing the check port cover on the left.** **5. Remove the two screws fixing the main unit and heat exchanger.** **6. Remove the screws on the front and right, fixing the main unit and heat exchanger.**	Check port cover (Left) 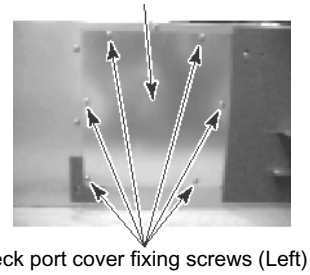 Check port cover fixing screws (Left) Heat exchanger fixing screws (Left) 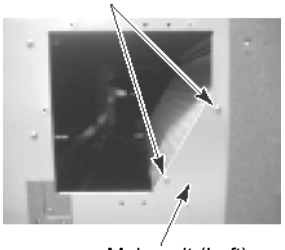 Main unit (Left)

8-5. Concealed duct high static pressure

MMD-AP0724H*, AP0964H*

▼ **Replacing the fan motor**

1 **Remove the electrical control cover. (2 screws)**

2 **Remove the fan motor lead.**

(1) Remove the fan motor lead connector. (3 positions)

(2) Remove the fan motor lead from the terminal board (terminal No. F1 – F3). (3 positions)

3 **Remove the TC1 / TC2 / TA / TCJ sensor leads and PMV coil lead from the control circuit board connector.**

4 **Remove the electrical control box from the side board. (2 screws)**

5 **Remove the side board from the main unit. (M5 screws, 8 pcs)**

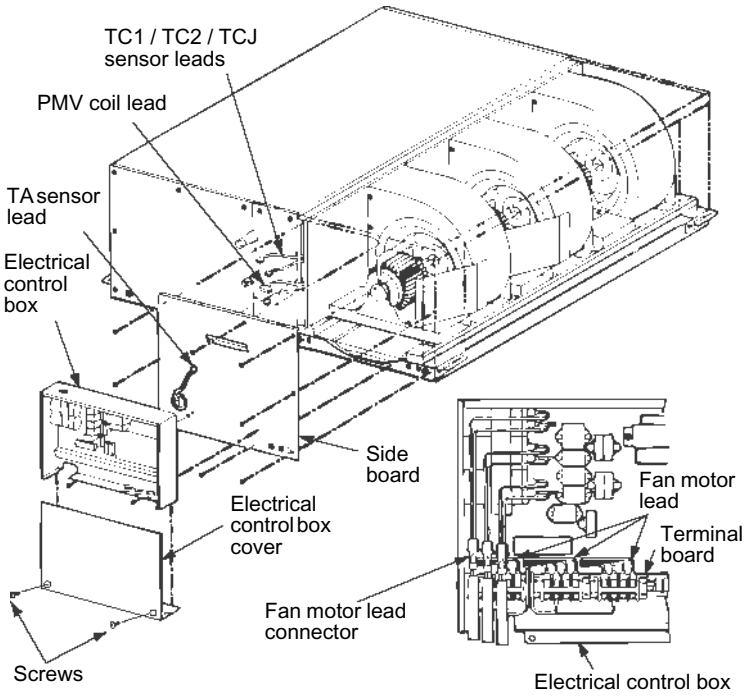

6 **Remove the three screws fixing the fan assembly, and slide the assembly along the guide rail to pull it out. (3 M5 tap tight screws)**

7 **Loosen the screws fixing the fan. (M8)**

8 **Remove the two screws fixing the motor band.**

9 **Replace the motor.**

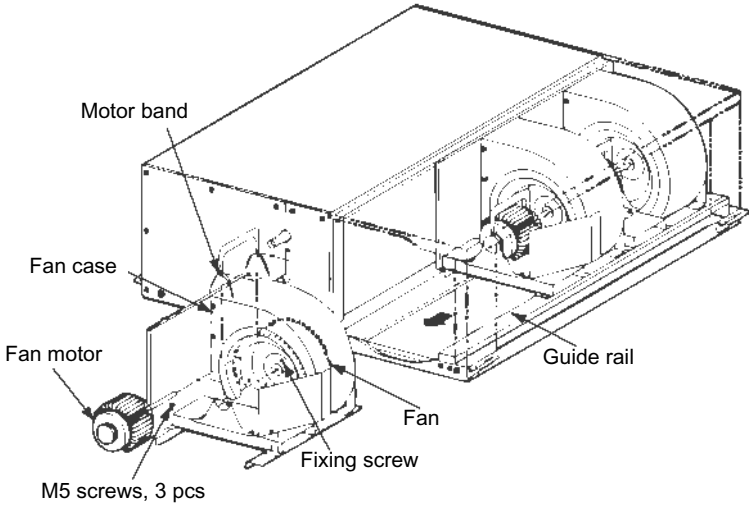

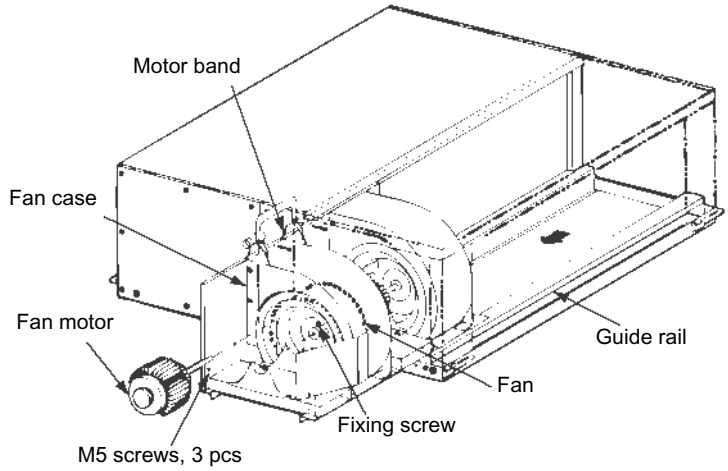

8-6. Ceiling

MMC-AP0154H*, AP0184H*, AP0244H*, AP0274H*, AP0364H*, AP0484H*

<table>
<tr><th>No.</th><th>Component</th><th>Procedure</th><th>Remarks</th></tr>
<tr><td>1</td><td>Intake grille</td><td>

REQUIREMENT

Wear gloves when working on it.
Failure to observe this precaution may cause injury due to components, etc.

1. Removing

1) Turn off the air conditioner and the breaker switch.
2) Slide the air intake grille fixing knobs (two positions) toward the arrow direction, and then open the air intake grille.

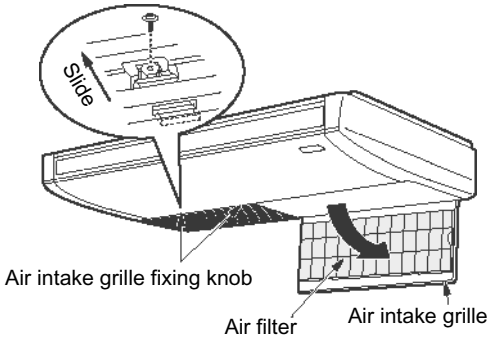

3) Slide the knob toward the intake grille to hang the grille.
4) Remove the hinge of the air intake grille.
When removing the hinge, push the center hook with a flat-head driver or the like.

Model	Knob	Hinge
AP015 – AP027	4 positions	4 positions
AP036 – AP048	6 positions	6 positions

2. Attaching

1) Hook the hinge of the air intake grille into the hole of the main unit.
Make sure that the hook is hooked firmly.
2) Fix the screws of air intake grille fixing knob on a side of each filter.

</td><td>

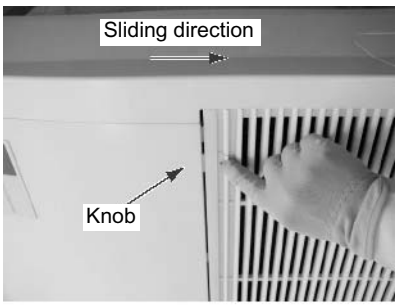

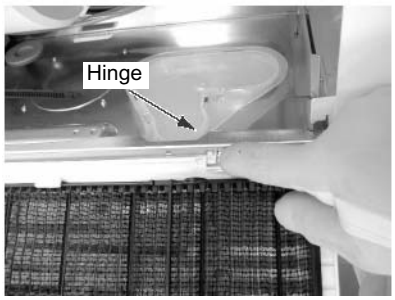

</td></tr>
<tr><td>2</td><td>Electrical control cover</td><td>

1. Removing

1) Perform Step **1** of **1**.
2) Loosen the screws fixing the electrical control cover.
(Ø4 X 10, 2)
3) The screw fixing part of the electrical control cover is a U-shaped groove.
Slide the electrical control cover toward the fan motor.

2. Attaching

1) Insert and close the electrical control cover into the back of the electrical control box.
2) Insert the fixing screws into the U-shaped groove of the electrical control cover, and tighten the screws.
(Ø4 X 10, 2)

</td><td>

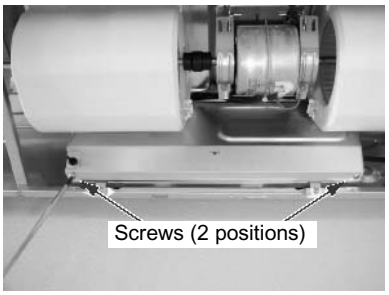

</td></tr>
</table>

No.	Component	Procedure	Remarks
3	Electrical control box	**1. Removing** 1) Perform Step **1** of **1** and Step **1** of **2**. 2) Remove the screws of the electrical control box. (Ø4 X 10, 2) 3) Pull down the electrical control box, and hook the back. **2. Attaching** 1) Insert the hook of the electrical control box into the hook part of the main unit. 2) Fix the electrical control box with the screws. (Ø4 X 10, 2)	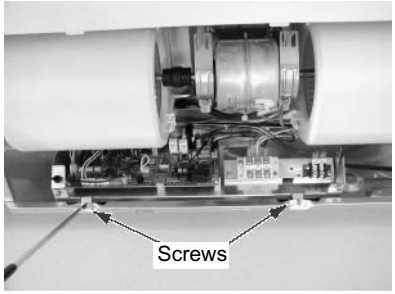 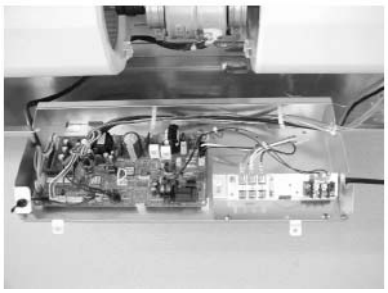
4	Control circuit board	**1. Removing** 1) Perform Step **1** of **1**, Step **1** of **2**, and Step **1** of **3**. 2) Remove the connector connected between the control circuit board and another component. **NOTE** Unlock the housing part before removing the connector. CN33: Louver motor (5P: White) CN41: Remote controller terminal 2P (3P: Blue) CN67: Power terminal 3P (3P: Black) CN82: PMV (6P: Blue) CN100: TC1 sensor (3P: Brown) CN101: TC2 sensor (2P: Black) CN102: TCJ sensor (2P: Red) CN104: Room temperature sensor (2P: Orange) CN333: Fan motor power (5P: White) CN334: Fan motor position detection (5P: White) 3) Unlock the card edge spacer (6 positions) to remove the control circuit board. **2. Attaching** 1) Fax the control circuit board onto the card edge spacer (6 positions). 2) Reconnect the connector removed in Step **1**. **NOTE** Make sure that the connector is securely and firmly connected.	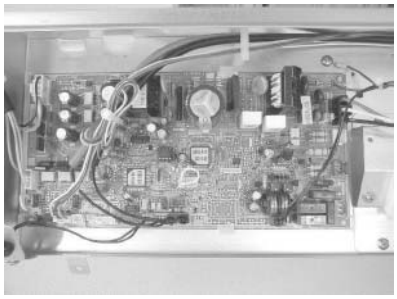

No.	Component	Procedure	Remarks
5	Fan Shaft Bearing Coupling Fan case		

Number of fans and attachment structure

Model	No.	Attachment
AP015 – AP018	2	Attach both sides of the fan motor directly.
AP024 – AP027	3	Use the shaft. Support one side of the shaft with the bearing.
AP036 – AP048	4	Use the shaft. Support the middle part of the shaft with the bearing.

1. Removing

NOTE

AP036 – AP048 is taken as an example.

1) Perform Step 1 of 1.
2) Remove the screw fixing the drain pan to remove the drain pan.
   (One drain pan is attached on the pipe removal side.)
3) Remove the hooks on both sides of the fan case (lower).
4) Remove the fan case (lower) from the separation board.
5) Remove the bolts (2 positions) fixing the bearing to remove the bearing from the main unit. (Ø8 X 12, 2).

NOTE

There are two bearing spacers between the cover and base fixing the bearing. Be careful not to lose them.

6) Loosen the screws with square holes of the coupling, and then remove the fan and shaft.
7) Loosen the screws with square holes of the coupling, and then remove the fan and shaft.
   If necessary, loosen the screws with square holes of the bearing, and then remove the bearing from the shaft.

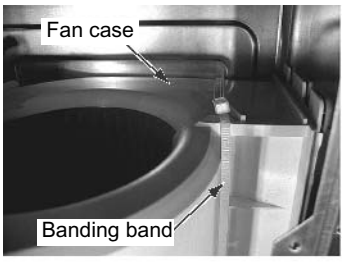

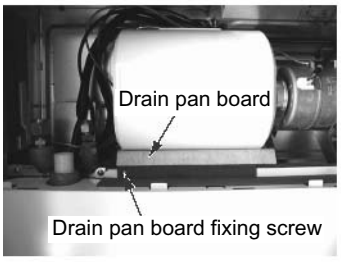

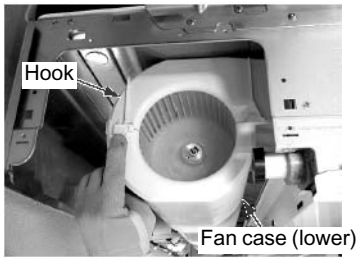

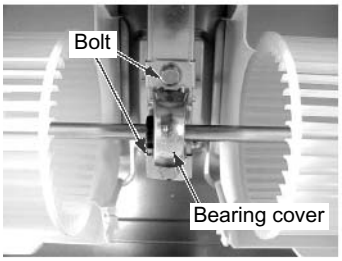

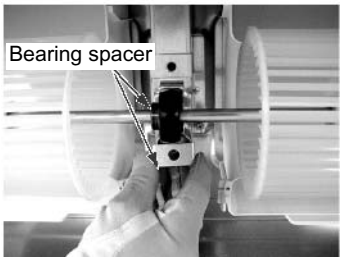

No.	Component	Procedure	Remarks
5	Fan Shaft Bearing Coupling Fan case (Continued)	**2. Attaching** 1) Attach the fan to the shaft. Place the tightening screw on the right side of the fan against the lower panel. (See the picture on the right.) On the boss of the fan, there is undercut for scratch made when the screw with square hole is attached to the shaft. Fit the shaft scratch to the fan groove. Tighten later. For the fan attaching direction, see the picture on the right. 2) Attach the bearing to the shaft in Step **1** if necessary. On the shaft, there is a groove to fit the attaching position for the bearing. Fit a single face of the coupling to the groove, and then fix with the screw with square hole. **NOTE** Tighten with torque wrench by 2.5 – 3.4 N•m. 3) Insert the shaft with fan into the coupling. Tighten later. 4) Reattach the bearing to the main unit. **NOTE** Insert the bearing spacer between the base and cover, and tighten with a bolt. (Ø8 X 12, 2) 5) Tighten the coupling. On the shaft, there is a groove to fit the attaching position for the coupling. Fit a single face of the coupling to the groove, and then fix with the screw with square hole **NOTE** Tighten with torque wrench by 4.9 N•m or more. 6) Position the fan so that the fan is placed on the center against the fan case (upper), and fix with the screw with square hole. **NOTE** Tighten with torque wrench by 4.9 N•m or more. 7) Reattach the fan case (lower). Make sure that the fan rotates smoothly.	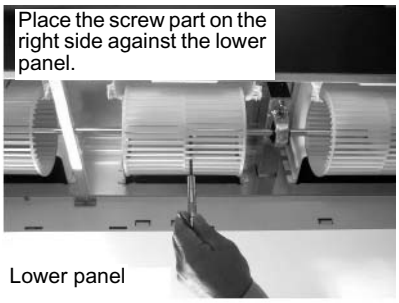 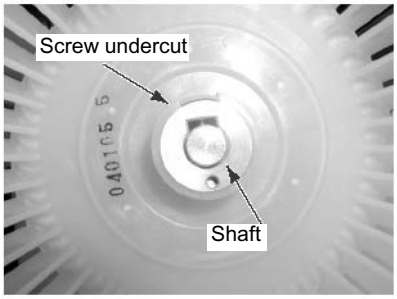 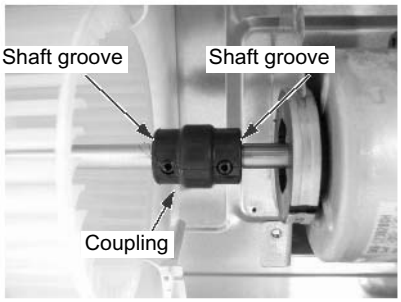 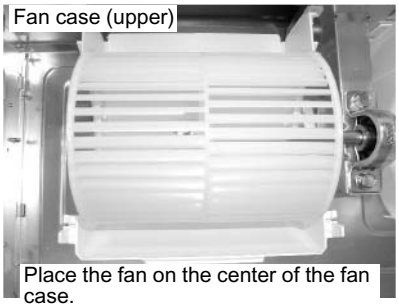

No.	Component	Procedure	Remarks
6	Fan motor	**1. Removing** 1) Perform Step **1** of **1**, Step **1** of **2**, and Step **1** of **5**. 2) Remove the clamp of the lead wire connected to the following connectors of the control circuit board. **NOTE** Unlock the housing part before removing the connector. CN333: Fan motor power (5P: White) CN334: Fan motor position detection (5P: White) 3) Remove the screw of the metal fitting fixing the fan motor. The earth screws are tightened together. (Ø5 X 10, 2) 4) Hold and remove the fan motor in order not to drop it. **2. Attaching** 1) Fix the components again in the following order: Fan motor → Motor fixing metal fittings → Electrical control box cover. Reconnect the connector and earth lead removed in Step **1**.	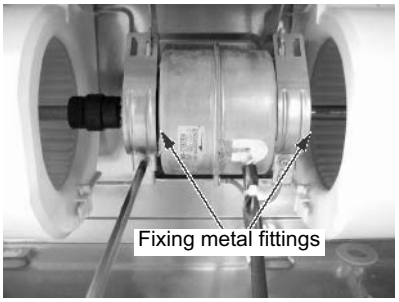
7	Side cover	**1. Removing** 1) Perform Step **1** of **1**. 2) Remove the screw of the side cover. (One side: Ø4 X 12 With washer: 1) 3) Slide the side cover in the discharge direction to remove it. **2. Attaching** 1) Insert the hook of the side cover into the square hole of the side of the main unit, and slide the cover in the intake direction to attach it. 2) Insert the screw into the side cover. (One side: Ø4 X 12 With washer: 1)	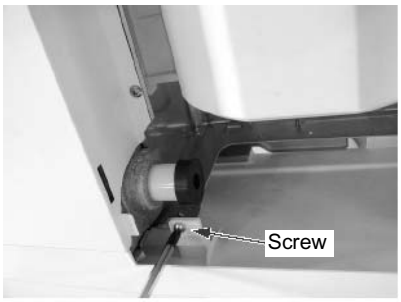 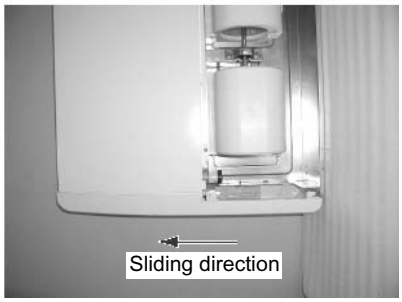

No.	Component	Procedure	Remarks
8	Lower panel	**1. Removing** 1) Perform Step **1** of **1** and Step **1** of **7**. 2) For AP024 – AP048, remove the strengthening metal fittings. (Ø4 X 12, 1) Remove the screw on the front, and thread it through the square hole of the side. For AP015 – AP018, there is no strengthening metal fitting. 3) Remove the screws from both sides. (One side: Ø4 X 8, 3) 4) Remove the screw of the fan. (Ø4 X 8, 3) 5) Slide the lower panel in the discharge direction to remove it. **NOTE** Slide it horizontally from the drain pan of the discharge. Applying excessive force may cause breakage. 6) When removing the sensor base, wrap vinyl tape on the tip of a flat-head driver as shown in the following picture, and then insert it into the groove of the side below the ○ sign of the cover. 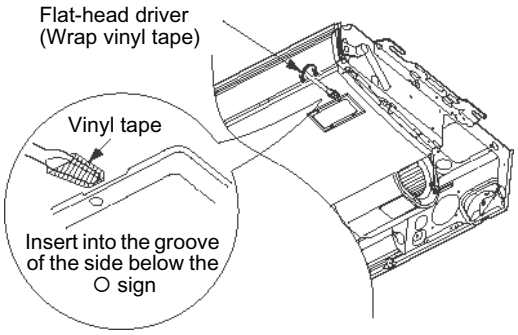 **2. Attaching** 1) Slide along the drain pan from the discharge to attach it. 2) Insert the screws (strengthening metal fittings for AP024 – AP048) removed in 1.	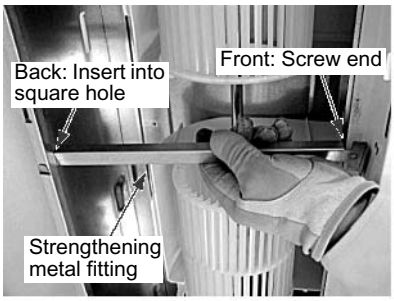

No.	Component	Procedure	Remarks
9	Drain pan	**1. Removing** 1) Perform Step **1** of **1**, Step **1** of **7**, and Step **1** of **8**. 2) Remove the drain cap, and then drain water from the drain pan. **NOTE** When removing the drain cap, put a bucket or the like for drain water. 3) Pick the hose band, slide from the drain pan connection part, and then remove the drain hose. 4) Remove the thermal insulator attached on the discharge of the drain pan, and then remove the stepped screw. AP015 – AP027 One stepped screw AP036 – AP048 Two stepped screws The removed thermal insulator is used when attaching. 5) Slide the drain pan toward the discharge to remove it. **2. Attaching** 1) Insert the drain cap deep into the drain pan. 2) Slide from the discharge, and then hook firmly on the hook part of the board metal on the fan. 3) Insert the stepped screw removed in 1, and attach the thermal insulator on it. 4) Use the hose band to attach the drain hose removed in 1.	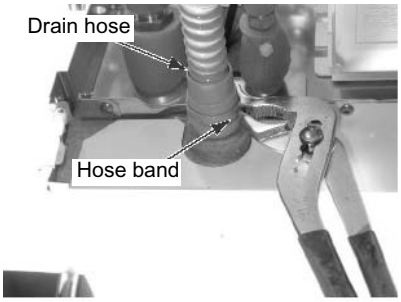 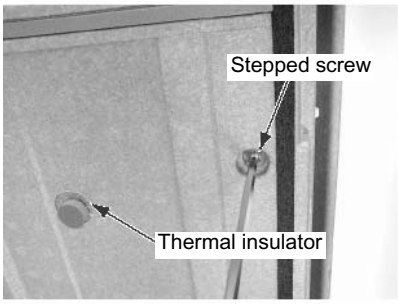

No.	Component	Procedure	Remarks
10	Heat exchanger PMV motor	**1. Removing** 1) Collect the refrigerant gas. 2) Remove the refrigerant pipe from the indoor unit. 3) Perform Step **1** of **1**, Step **1** of **7**, Step **1** of **8** and Step **1** of **9**. Also remove the sensors. 4) Remove the screws fixing the pipe fixing to remove it. (Ø4 X 8, 2) 5) When replacing the PMV motor, peel off the butyl rubber put on the PMV itself until the PMV appears, and loosen the nut fixing the PMV motor with a double spanner to remove it. 6) Hold the heat exchanger and remove the screws fixing the heat exchange separation board to remove it. (Ø4 X 8, 4) 7) Hold the heat exchanger and remove the screws fixing the heat exchanger on the opposite side of the heat exchange separation board to remove the heat exchanger. (Ø4 X 8, 2) **2. Attaching** 1) Fix the components together with the sensors in the following order: Heat exchanger → Pipe fixing → Drain pan → Lower panel. 2) Reconnect the refrigerant pipe and purge air.	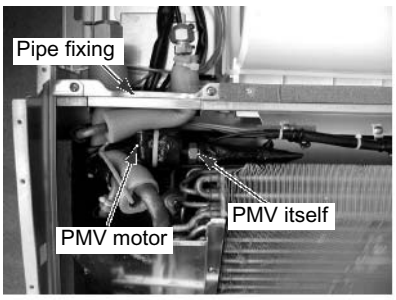 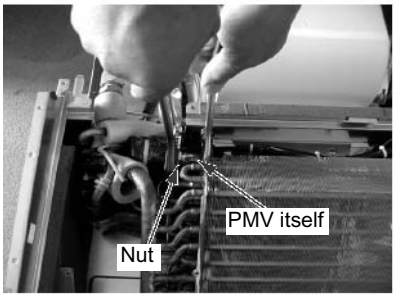 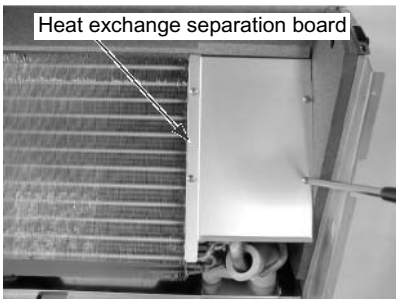

8-7. Floor standing

MMF-AP0154H*, AP0184H*, AP0244H*, AP0274H*, AP0364H*, AP0484H*, AP0564H*

1. Electrical component assembly

1. **Stop the air conditioner and turn off the main power.**
2. **Pull the upper part of the intake grille toward you. Remove the two strings connecting the intake grille and main unit, and then pull up the intake grille to remove it.**
3. **Follow the procedure below to remove the electrical control box put on the bottom board:**

AP015 – AP027
1) Remove the screws **1** and **2** on the electrical control box to remove the drip-proof cover.
2) Remove the screws **3** and **4** on the front of the electrical control box to remove the electrical control box cover.
3) Remove the fan motor connector (9P) from CN083 (White).
4) Remove the louver motor connector (3P) from CN033 (Green).
5) Remove the remote controller connector (3P) from CN041 (Blue).
6) Remove the PMV connector (6P) from CN082 (Blue).
7) Remove the three temperature sensors from CN101 (Black), CN102 (Red), and CN104 (Yellow).
8) Remove the indoor and outdoor connectors.
9) Remove the two screws fixing the electrical control box to the lower cabinet, slide the box to the right, and pull it out toward you.

AP036 – AP048
1) Remove the screws **3** and **4** on the front of the electrical control box to remove the electrical control box cover.
2) Remove the fan motor connector (9P) from CN083 (White).
3) Remove the louver motor connector (3P) from CN033 (Green).
4) Remove the remote controller connector (3P) from CN041 (Blue).
5) Remove the PMV connector (6P) from CN082 (Blue).
6) Remove the three temperature sensors from CN101 (Black), CN102 (Red), and CN104 (Yellow).
7) Remove the indoor and outdoor connectors.
8) Remove the screws **1** and **2** on the electrical control box.
9) Remove the two screws fixing the electrical control box to the lower cabinet, slide the box to the right, and pull it out toward you.

* Only AP015 – AP027 models are equipped with a drip-proof cover.

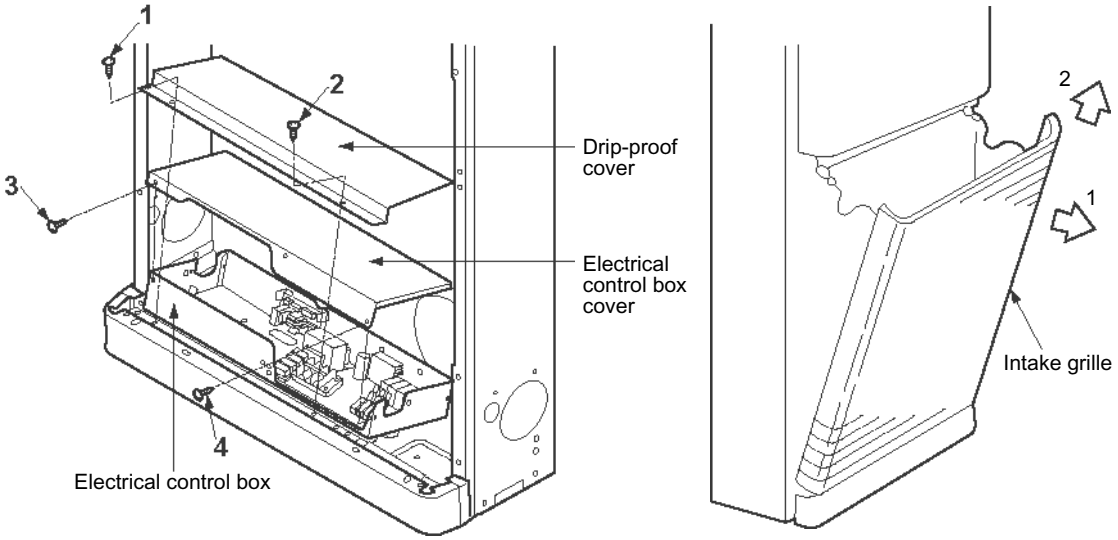

2. Heat exchanger

1. **Perform Step 1 and 2 of Electrical component assembly.**
2. **Remove the two screws fixing the upper cabinet, slide the cabinet upward by approximately 30 mm, and pull it out toward you.**
3. **Follow the procedure below to remove the heat exchanger assembly:**

AP015 – AP027
1) Remove the relay connector of the PMV lead wire.
2) Remove the screws **1** (4 positions) fixing the upper shield and box, and pull the heat exchange assembly out toward you.
3) Remove the screws **2** (2 positions) of the heat exchange assembly pulled out, and then remove the upper shield.
4) Remove the screws **3** (4 positions) of the heat exchange assembly pulled out, and then remove the evaporator shield.
5) Remove the three temperature sensors from the heat exchange assembly, and then the heat exchange assembly itself.

AP036 – AP048
1) Remove the relay connector of the PMV lead wire.
2) Remove the screws **1** (3 positions) fixing the upper shield and box, and pull the heat exchange assembly out toward you.
3) Remove the screws **2** (2 positions) of the heat exchange assembly pulled out, and then remove the upper shield.
4) Remove the screws **3** (5 positions) of the heat exchange assembly pulled out, and then remove the evaporator shield.
5) Remove the three temperature sensors from the heat exchange assembly, and then the heat exchange assembly itself.
* Wear the protective gloves when removing.
Failure to observe this precaution may cause injury

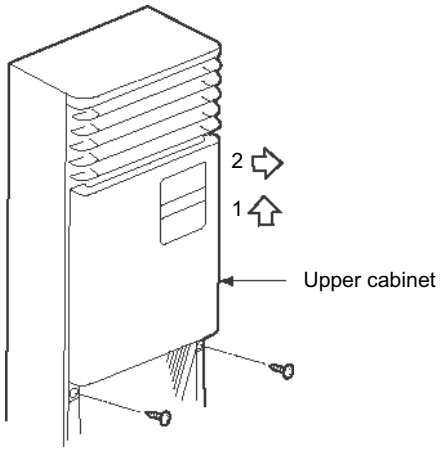

<AP015 – AP027>

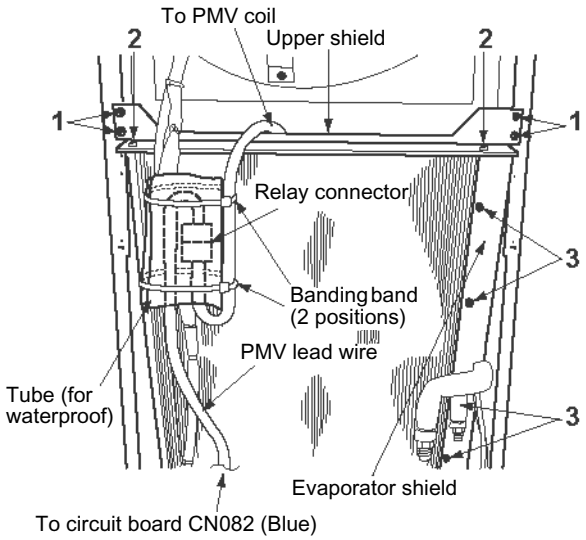

<AP036 – AP056>

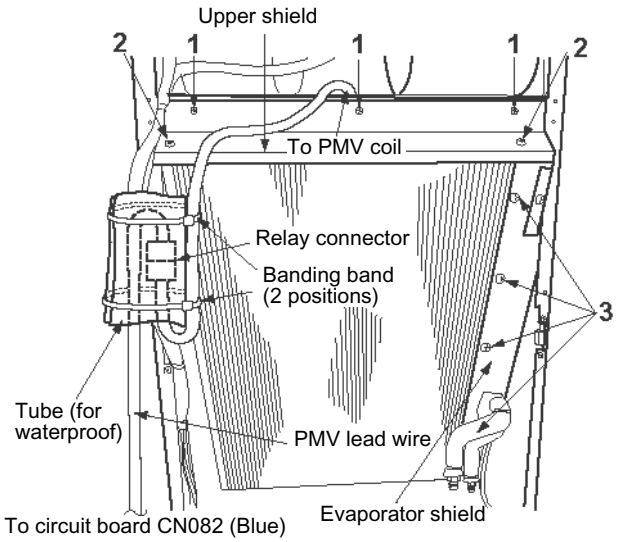

3. Fan assembly

1. **Perform Step 1 and 2 of Electrical component assembly.**
2. **Perform Step 2 of Heat exchanger.**
3. **Follow the procedure below to remove the fan:**

AP015 – AP027

1) Cut the banding band fixing the fan motor lead wires, and remove the relay connector in the electrical control box.
2) Remove the motor base fixing screws **1** (5 positions).
3) Remove the fan (with one screw) of the fan assembly.
4) Remove the motor base fixing screws **2** (3 positions), and then the fan motor.

AP036 – AP056

1) Cut the banding band fixing the fan motor lead wires, and remove the relay connector in the electrical control box.
2) Remove the fixing screws **1** (3 positions) of the shield to remove it.
3) Remove the fan ceiling fixing screws **2** (4 positions), and then put out the fan assembly toward you.
4) Remove the screws **3** (4 positions) fixing the motor fixing board and reception board.
5) Remove the screws (4 per side) fixing the left and right of the bell mouth on the motor, and then remove the fan case (4 screws per side).
6) Remove the fan (with one screw per side) from the fan motor.
7) Remove the motor band, and then the fan motor.

* Wear the protective gloves when removing.
Failure to observe this precaution may cause injury

<AP015 – AP027>

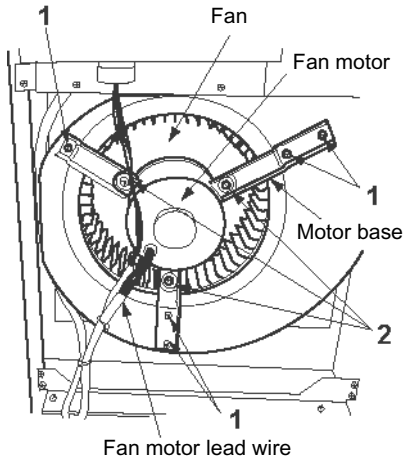

<AP015 – AP027> Fan assembly components

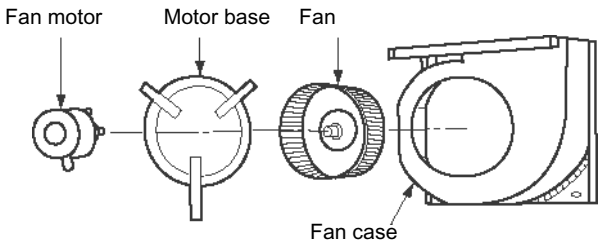

<AP036 – AP056>

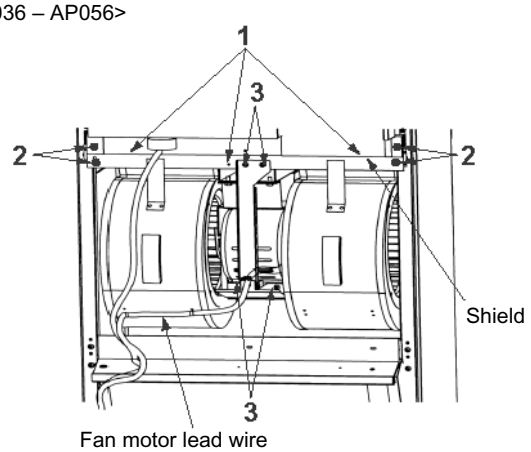

<AP036 – AP056> Fan assembly components

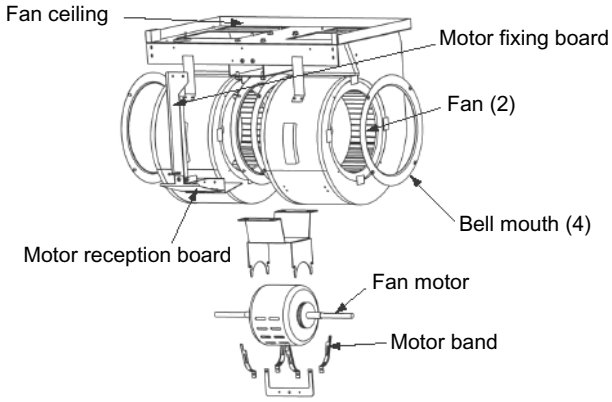

8-8. Floor standing cabinet

MML-AP0074H*, AP0094H*, AP0124H*, AP0154H*, AP0184H*, AP0244H*

1. Removing the electrical control assembly

⚠ CAUTION

Wear the protective gloves when removing.
Failure to observe this precaution may cause injury.

1) Stop the air conditioner and turn off the main power.
2) Remove the two intake grilles. (No fixing screw)
3) Remove the front panel. (2 M4 screws)
4) Remove the discharge grille. (M4 X 20L: 2)
5) Remove the control assembly. (3 M4 screws)
6) Remove the screw fixing the electrical control assembly to the box, and pull it out toward you.

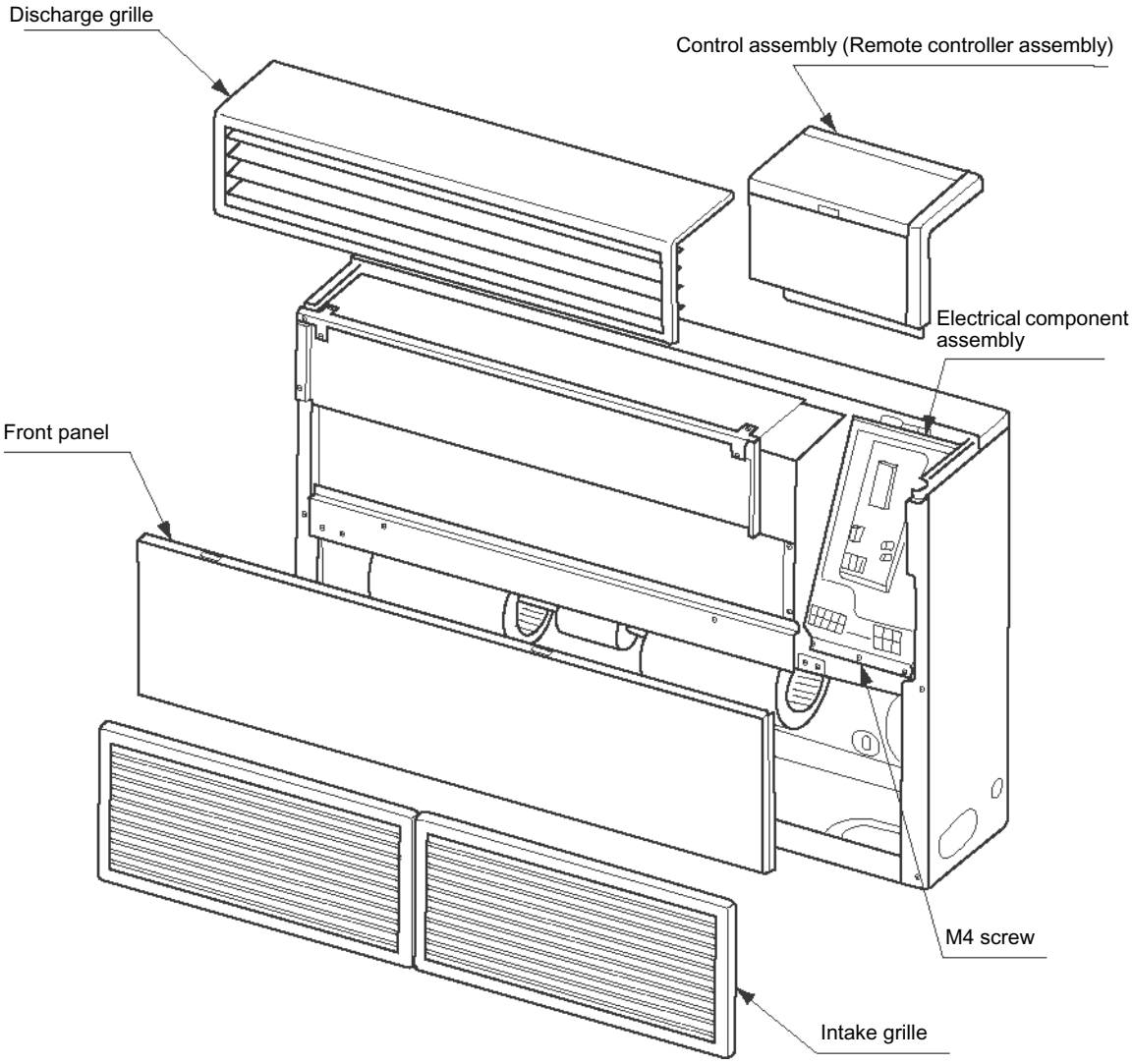

2. Removing the heat exchanger

1) Follow "1. Removing the electrical control assembly" to remove the electrical control assembly.
2) Remove the connecting pipes. (Liquid and gas pipes)
3) Remove the strengthening board. (2 M4 screws)
4) Remove the upper panel.
5) Remove the vertical grille. (4 M4 screws)
6) Remove the heat exchange shield (front). (3 M4 screws)
7) Remove the heat exchange shield (right). (2 M4 screws)
8) Remove the screws fixing the heat exchanger. (4 M4 screws)
9) Remove the shield on the side of the heat exchanger. (2 M4 screws)
10) Slide the heat exchanger to the right, keep the connecting pipe away from the drain pan, and then pull the exchanger upward.

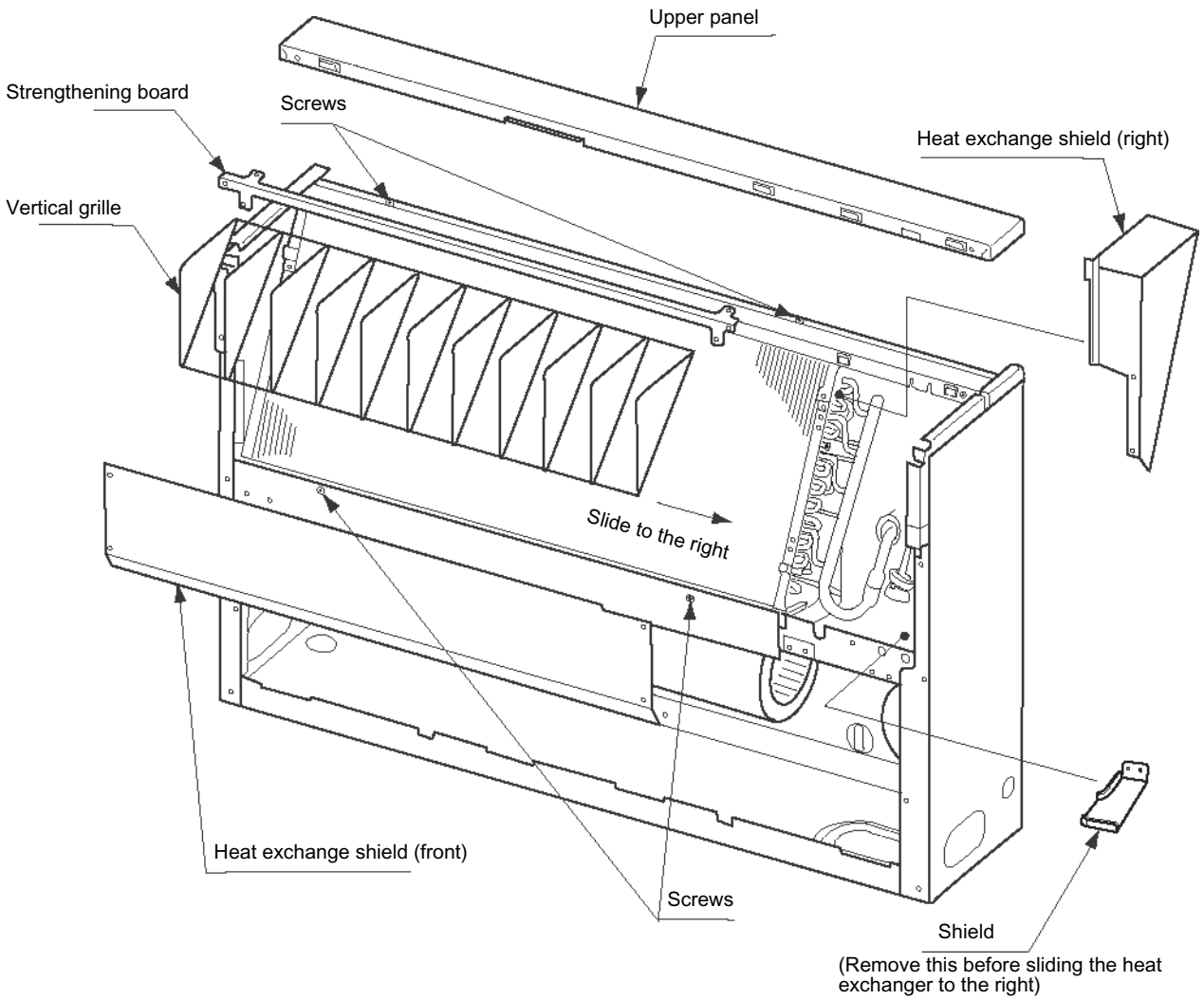

3. Removing the fan assembly

1) Follow "2. Removing the heat exchanger" to remove the heat exchanger.
2) Remove the nut in the deep right corner of the fan assembly. (M6 nut: 1 position)
3) Remove the two screws in the left of the fan assembly. (M4 screw)
4) Pull out the fan assembly toward you.

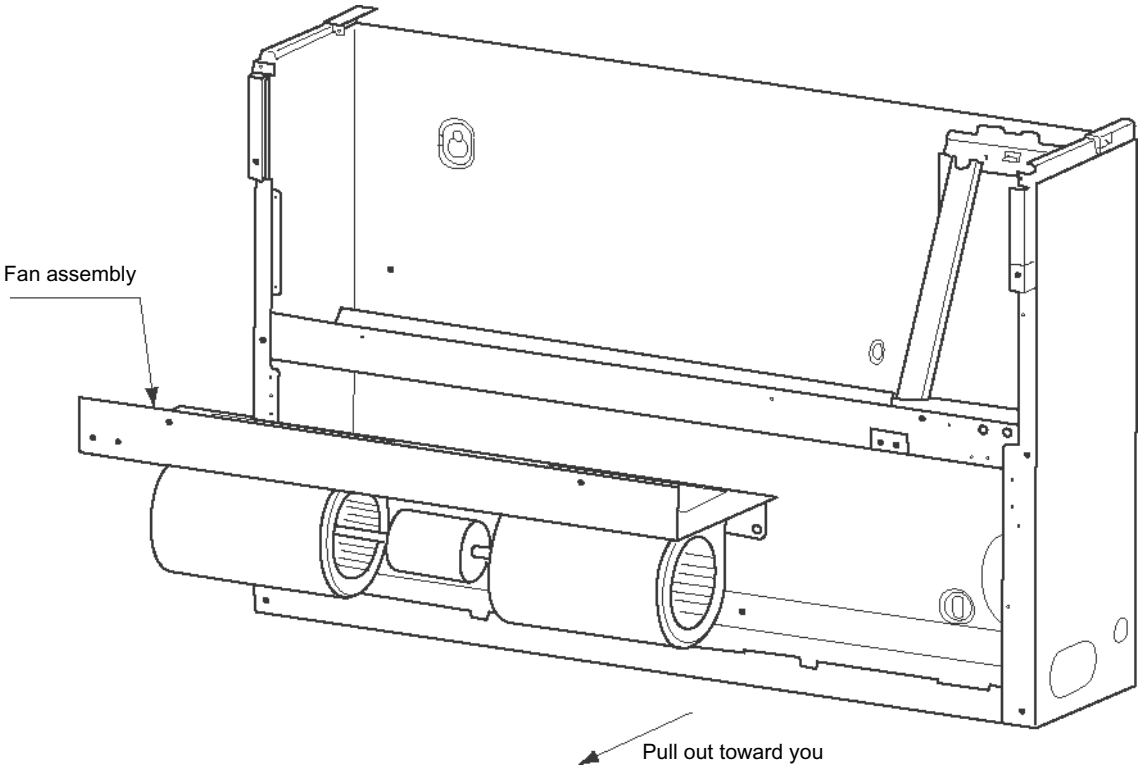

9 Exploded Diagram / Service Parts List

9-1. 1-way cassette type (YH)

MMU-AP0074YH*, AP0094YH*, AP0124YH*

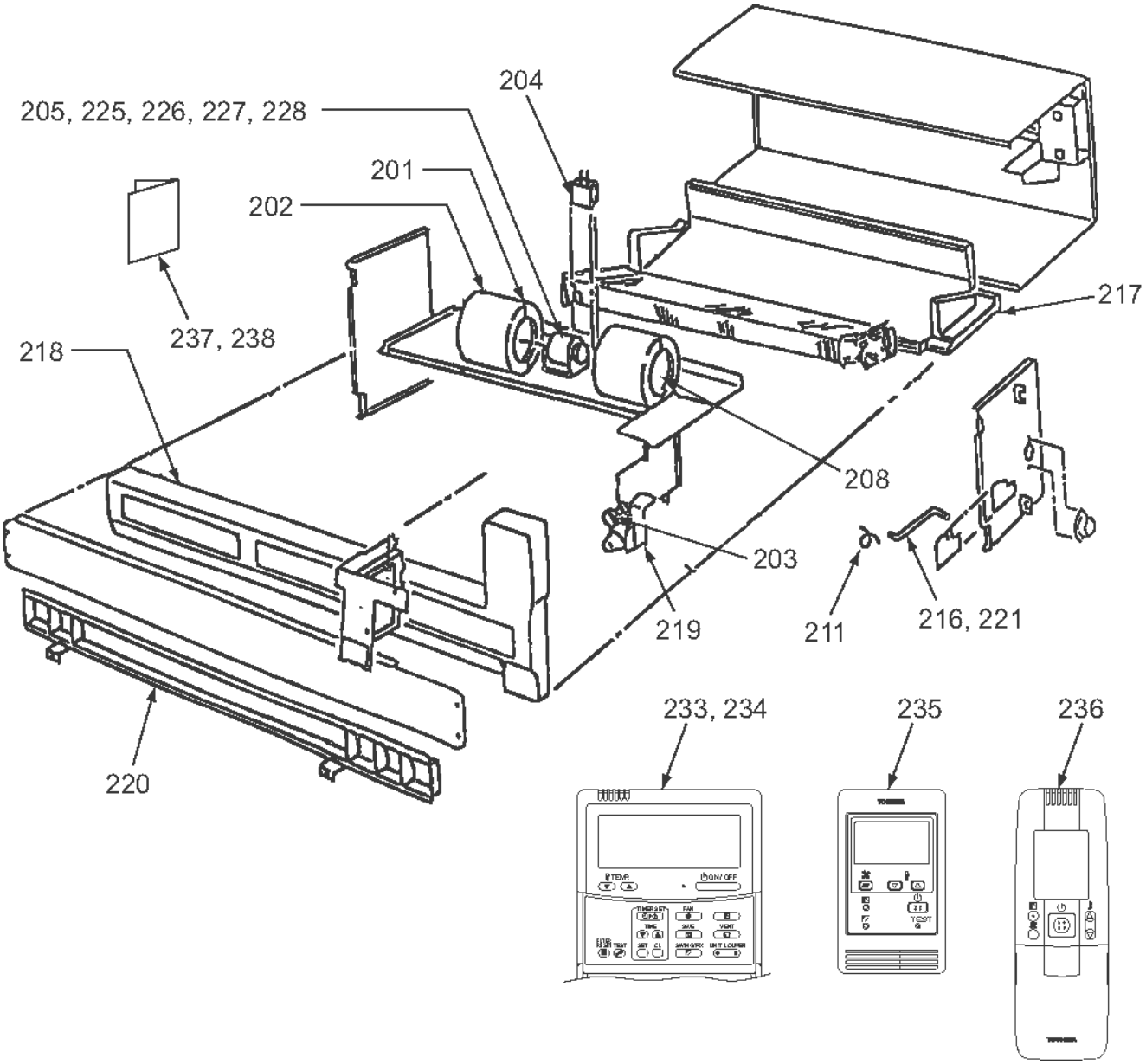

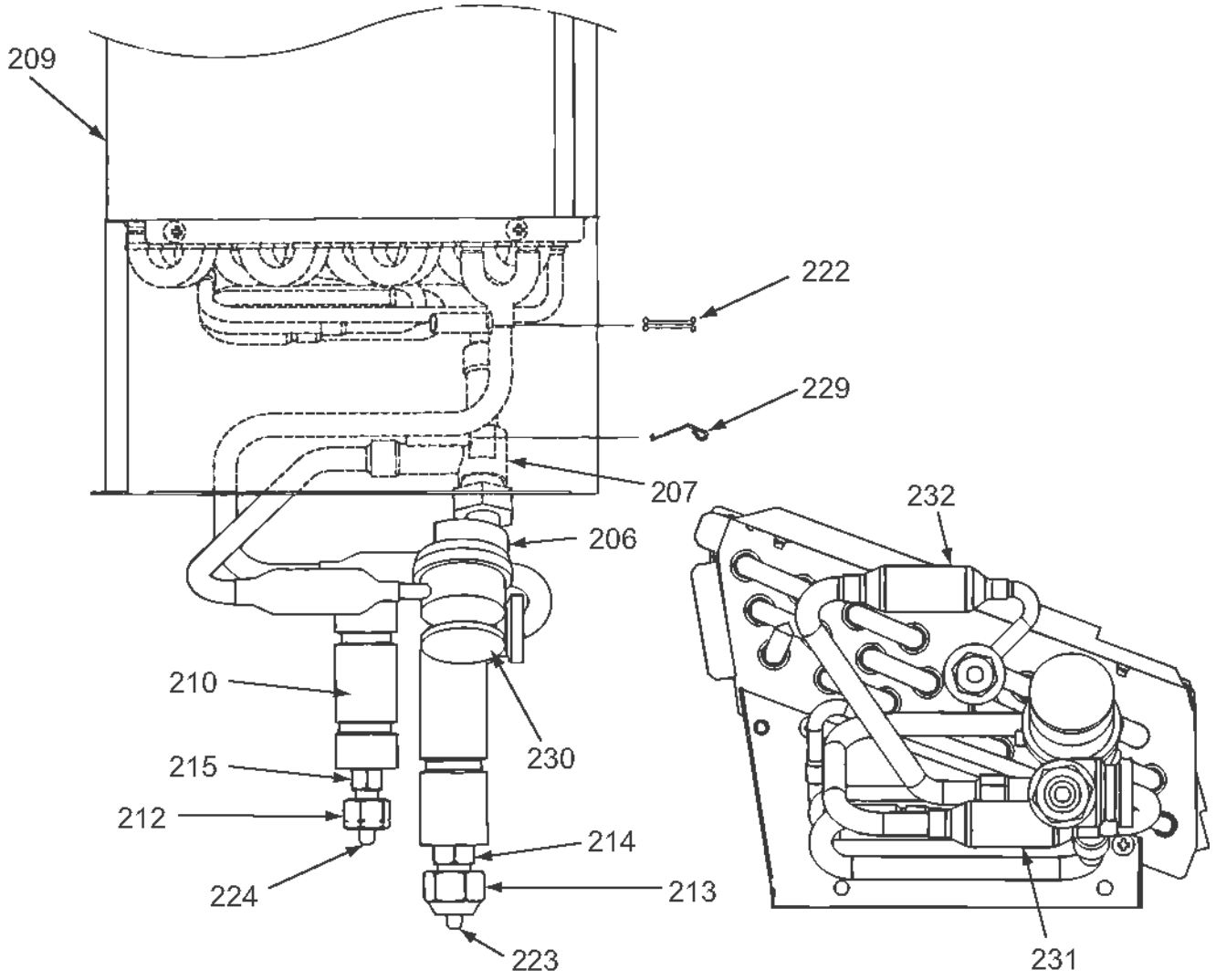
209
222
229
207
206
232
210
230
215
212
214
224
213
223
231

Location No.	Part No.	Description	MMU-		
			AP0074YH-E	AP0094YH-E	AP0124YH-E
201	43039234	CASE, FAN, UP SIDE	2	2	2
202	43039235	CASE, FAN, LOWER	2	2	2
203	43151292	SWITCH, FLOAT	1	1	1
204	43155178	CAPACITOR	1	1	1
205	4312C022	MOTOR, FAN	1	1	1
206	43146707	MOTOR, PMV	1	1	1
207	43146713	VALVE, PMV	1	1	1
208	43120236	FAN, MULTI BLADE	2	2	2
209	4314J421	EVAPORATOR ASSY	1	1	1
210	4314Q075	DISTRIBUTOR ASSY	1	1	1
211	43179117	BAND, HOSE	1	1	1
212	43047685	NUT, FLARE, 1/4 IN	1	1	1
213	43149355	NUT, FLARE, 3/8, IN	1	1	1
214	43049776	SOCKET	1	1	1
215	43194077	SOCKET, 1/8 IN	1	1	1
216	43070146	HOSE, DRAIN	1	1	1
217	43122082	CASING, ASSY	1	1	1
218	43172143	DRAIN PAN, INST, ASSY	1	1	1
219	43121731	PUMP ASSY	1	1	1
220	43109369	GRILLE ASSY, P	1	1	1
221	43170211	HOSE, DRAIN	1	1	1
222	43107215	HOLDER, SENSOR	1	1	1
223	43047609	BONNET	1	1	1
224	43049697	BONNET	1	1	1
225	43139154	BAND, MOTOR, LEFT	1	1	1
226	43139155	BAND, MOTOR, RIGHT	1	1	1
227	43139161	BAND, MOTOR, LEFT	1	1	1
228	43139162	BAND, MOTOR, RIGHT	1	1	1
229	43019904	HOLDER, SENSOR (TS)	2	2	2
230	43149314	SHEET, PMV	1	1	1
231	43147664	STRAINER	1	1	1
232	43147665	STRAINER	1	1	1
233	43166011	REMOTE CONTROLLER, SX-A4EE	1	1	1
234	43166012	REMOTE CONTROLLER, SX-A5EE	1	1	1
235	43166004	REMOTE CONTROLLER, SX-A11JE2	1	1	1
236	43166006	REMOTE CONTROLLER, WH-H1JE2	1	1	1
237	431S8205	OWNER'S MANUAL, MMY-MAP0804HT8-E	1	1	1

Location No.	Part No.	Description	MMU-		
			AP0074YH-TR	AP0094YH-TR	AP0124YH-TR
201	43039234	CASE, FAN, UP SIDE	2	2	2
202	43039235	CASE, FAN, LOWER	2	2	2
203	43151292	SWITCH, FLOAT	1	1	1
204	43155178	CAPACITOR	1	1	1
205	4312C022	MOTOR, FAN	1	1	1
206	43146707	MOTOR, PMV	1	1	1
207	43146713	VALVE, PMV	1	1	1
208	43120236	FAN, MULTI BLADE	2	2	2
209	4314J421	EVAPORATOR ASSY	1	1	1
210	4314Q075	DISTRIBUTOR ASSY	1	1	1
211	43179117	BAND, HOSE	1	1	1
212	43047685	NUT, FLARE, 1/4 IN	1	1	1
213	43149355	NUT, FLARE, 3/8, IN	1	1	1
214	43049776	SOCKET	1	1	1
215	43194077	SOCKET, 1/8 IN	1	1	1
216	43070146	HOSE, DRAIN	1	1	1
217	43122082	CASING, ASSY	1	1	1
218	43172143	DRAIN PAN, INST, ASSY	1	1	1
219	43121731	PUMP ASSY	1	1	1
220	43109369	GRILLE ASSY, P	1	1	1
221	43170211	HOSE, DRAIN	1	1	1
222	43107215	HOLDER, SENSOR	1	1	1
223	43047609	BONNET	1	1	1
224	43049697	BONNET	1	1	1
225	43139154	BAND, MOTOR, LEFT	1	1	1
226	43139155	BAND, MOTOR, RIGHT	1	1	1
227	43139161	BAND, MOTOR, LEFT	1	1	1
228	43139162	BAND, MOTOR, RIGHT	1	1	1
229	43019904	HOLDER, SENSOR (TS)	2	2	2
230	43149314	SHEET, PMV	1	1	1
231	43147664	STRAINER	1	1	1
232	43147665	STRAINER	1	1	1
233	43166011	REMOTE CONTROLLER, SX-A4EE	1	1	1
234	43166012	REMOTE CONTROLLER, SX-A5EE	1	1	1
235	43166004	REMOTE CONTROLLER, SX-A11JE2	1	1	1
236	43166006	REMOTE CONTROLLER, WH-H1JE2	1	1	1
238	431S8206	OWNER'S MANUAL, MMY-MAP0804HT8-TR	1	1	1

E-Parts

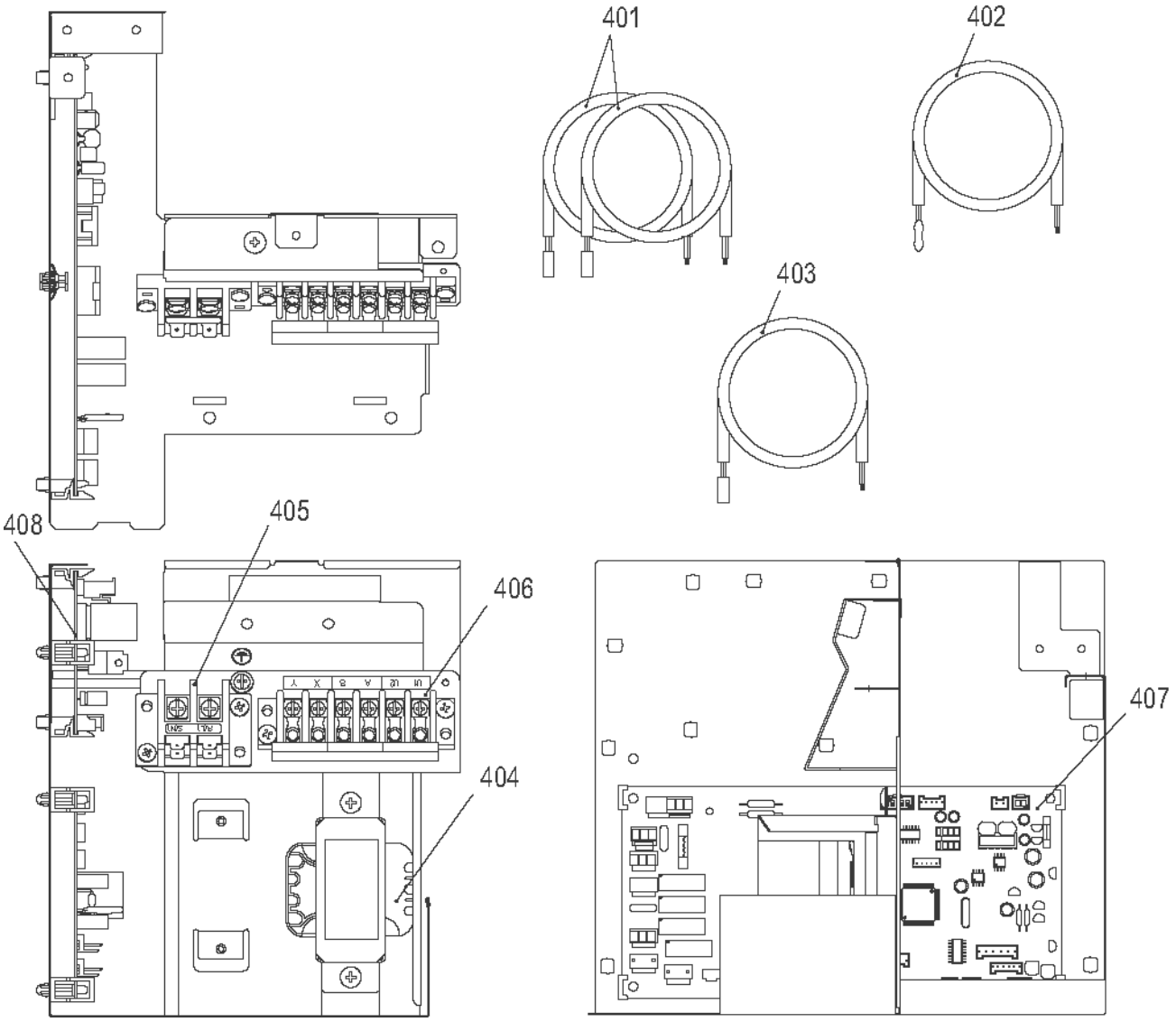

Location No.	Part No.	Description	MMU-		
			AP0074YH-E(TR)	AP0094YH-E(TR)	AP0124YH-E(TR)
401	43050425	SENSOR ASSY, SERVICE, TC	2	2	2
402	43050426	SENSOR, SERVICE, TA	1	1	1
403	43150320	SENSOR ASSY, SERVICE, TG	1	1	1
404	43158204	TRANSFORMER, TT-13	1	1	1
405	43160575	TERMINAL BLOCK, 2P, 20A	1	1	1
406	43160583	TERMINAL, 6P	1	1	1
407	4316V444	P.C. BOARD ASSY, MCC-1403	1	1	1
408	4316V345	P.C. BOARD ASSY, MCC-1520	1	1	1

9-2. 1-Way cassette type (SH)

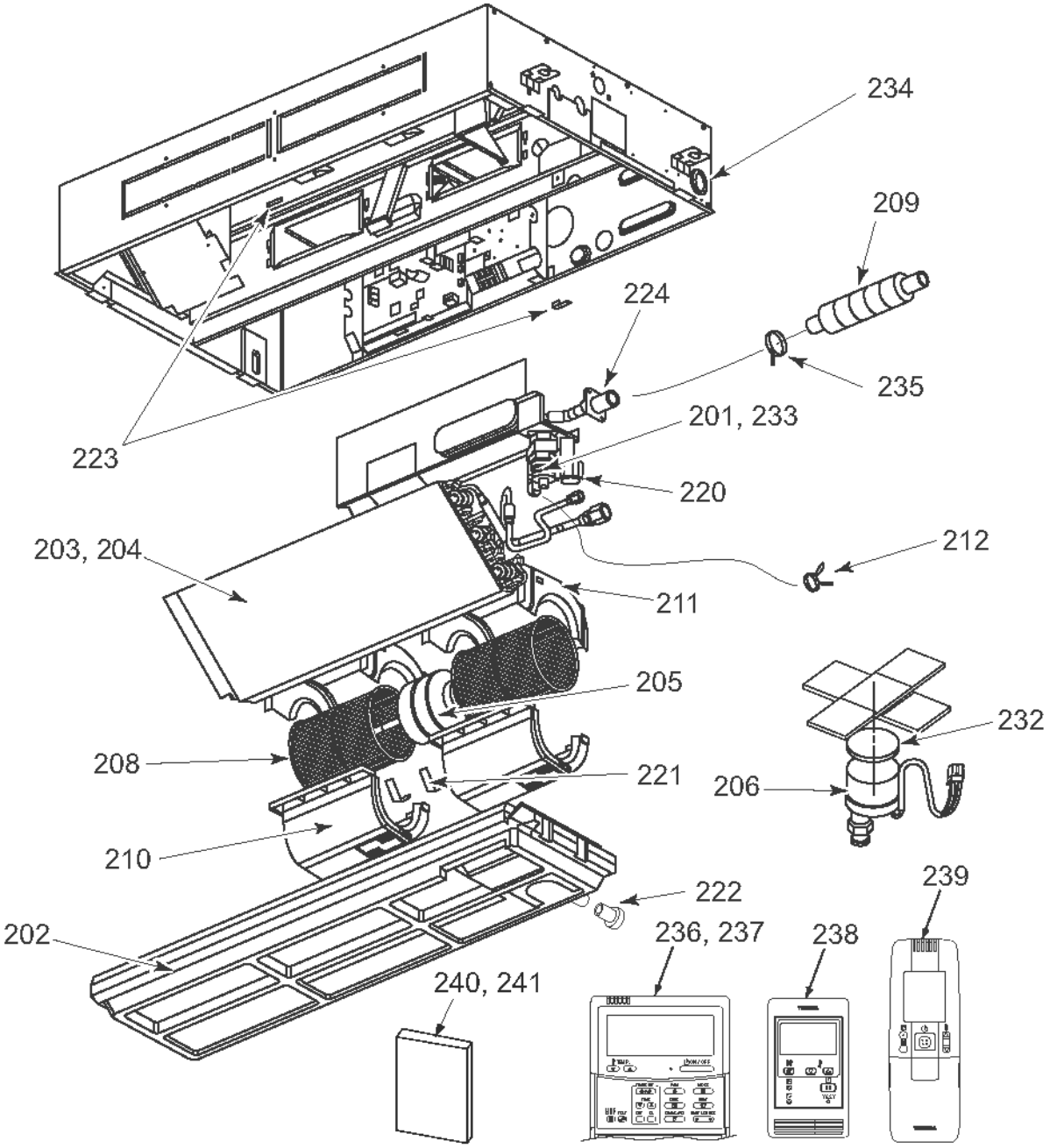

AP015, AP018

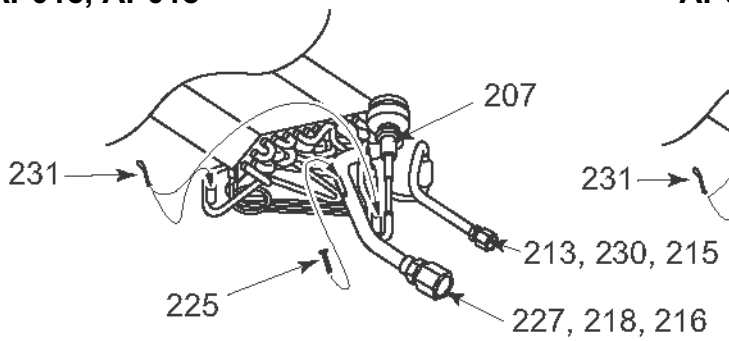

AP024

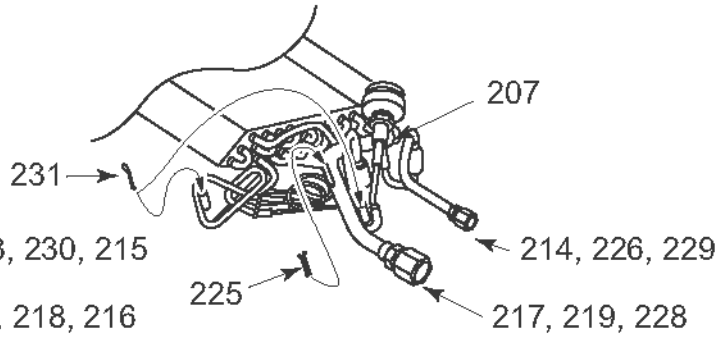

Location No.	Part No.	Description	MMU-		
			AP0154SH-E	AP0184SH-E	AP0244SH-E
201	43121736	PUMP, DRAIN, ADP-1409	1	1	1
202	43172195	PAN ASSY, DRAIN	1	1	1
203	4314J370	REFRIGERATION CYCLE ASSY	1	1	
204	4314J371	REFRIGERATION CYCLE ASSY			1
205	43121742	MOTOR, FAN	1	1	1
206	43146707	MOTOR, PMV	1	1	1
207	43146714	VALVE, PMV	1	1	1
208	43120227	FAN, MULTI BLADE	2	2	2
209	43170244	HOSE, DRAIN	1	1	1
210	43122084	CASE, FAN, LOWER	2	2	2
211	43122085	CASE, FAN, UPPER	2	2	2
212	43079249	BAND, HOSE	1	1	1
213	43047685	NUT, FLARE, 1/4 IN	1	1	
214	43049776	SOCKET			1
215	43149351	SOCKET	1	1	
216	43047688	NUT, FLARE, 1/2, IN	1	1	
217	43149352	NUT, FLARE, 5/8, IN			1
218	43149353	SOCKET	1	1	
219	43149354	SOCKET			1
220	43151284	SWITCH, FLOAT	1	1	1
221	43139152	BAND, MOTOR	2	2	2
222	43179129	CAP DRAIN	1	1	1
223	43119481	NUT, PLATE	2	2	2
224	43170240	HOSE, DRAIN	1	1	1
225	43107215	HOLDER, SENSOR	1	1	1
226	43047609	BONNET			1
227	43147195	BONNET, 1/2 IN	1	1	
228	43194029	BONNET			1
229	43149355	NUT, FLARE, 3/8, IN			1
230	43049697	BONNET	1	1	
231	43019904	HOLDER, SENSOR (TS)	2	2	2
232	43149314	SHEET, PMV	1	1	1
233	43179126	RUBBER, PUMP DRAIN	3	3	3
234	43162051	BUSHING	1	1	1
235	43179149	BAND, HOSE	1	1	1
236	43166011	REMOTE CONTROLLER, SX-A4EE	1	1	1
237	43166012	REMOTE CONTROLLER, SX-A5EE	1	1	1
238	43166004	REMOTE CONTROLLER, SX-A11JE2	1	1	1
239	43166006	REMOTE CONTROLLER, WH-H1JE2	1	1	1
240	431S8205	OWNER'S MANUAL, MMY-MAP0804HT8-E	1	1	1

Location No.	Part No.	Description	MMU-		
			AP0154SH-TR	AP0184SH-TR	AP0244SH-TR
201	43121736	PUMP, DRAIN, ADP-1409	1	1	1
202	43172195	PAN ASSY, DRAIN	1	1	1
203	4314J370	REFRIGERATION CYCLE ASSY	1	1	
204	4314J371	REFRIGERATION CYCLE ASSY			1
205	43121742	MOTOR, FAN	1	1	1
206	43146707	MOTOR, PMV	1	1	1
207	43146714	VALVE, PMV	1	1	1
208	43120227	FAN, MULTI BLADE	2	2	2
209	43170244	HOSE, DRAIN	1	1	1
210	43122084	CASE, FAN, LOWER	2	2	2
211	43122085	CASE, FAN, UPPER	2	2	2
212	43079249	BAND, HOSE	1	1	1
213	43047685	NUT, FLARE, 1/4 IN	1	1	
214	43049776	SOCKET			1
215	43149351	SOCKET	1	1	
216	43047688	NUT, FLARE, 1/2, IN	1	1	
217	43149352	NUT, FLARE, 5/8, IN			1
218	43149353	SOCKET	1	1	
219	43149354	SOCKET			1
220	43151284	SWITCH, FLOAT	1	1	1
221	43139152	BAND, MOTOR	2	2	2
222	43179129	CAP DRAIN	1	1	1
223	43119481	NUT, PLATE	2	2	2
224	43170240	HOSE, DRAIN	1	1	1
225	43107215	HOLDER, SENSOR	1	1	1
226	43047609	BONNET			1
227	43147195	BONNET, 1/2 IN	1	1	
228	43194029	BONNET			1
229	43149355	NUT, FLARE, 3/8, IN			1
230	43049697	BONNET	1	1	
231	43019904	HOLDER, SENSOR (TS)	2	2	2
232	43149314	SHEET, PMV	1	1	1
233	43179126	RUBBER, PUMP DRAIN	3	3	3
234	43162051	BUSHING	1	1	1
235	43179149	BAND, HOSE	1	1	1
236	43166011	REMOTE CONTROLLER, SX-A4EE	1	1	1
237	43166012	REMOTE CONTROLLER, SX-A5EE	1	1	1
238	43166004	REMOTE CONTROLLER, SX-A11JE2	1	1	1
239	43166006	REMOTE CONTROLLER, WH-H1JE2	1	1	1
241	431S8206	OWNER'S MANUAL, MMY-MAP0804HT8-TR	1	1	1

E-Parts

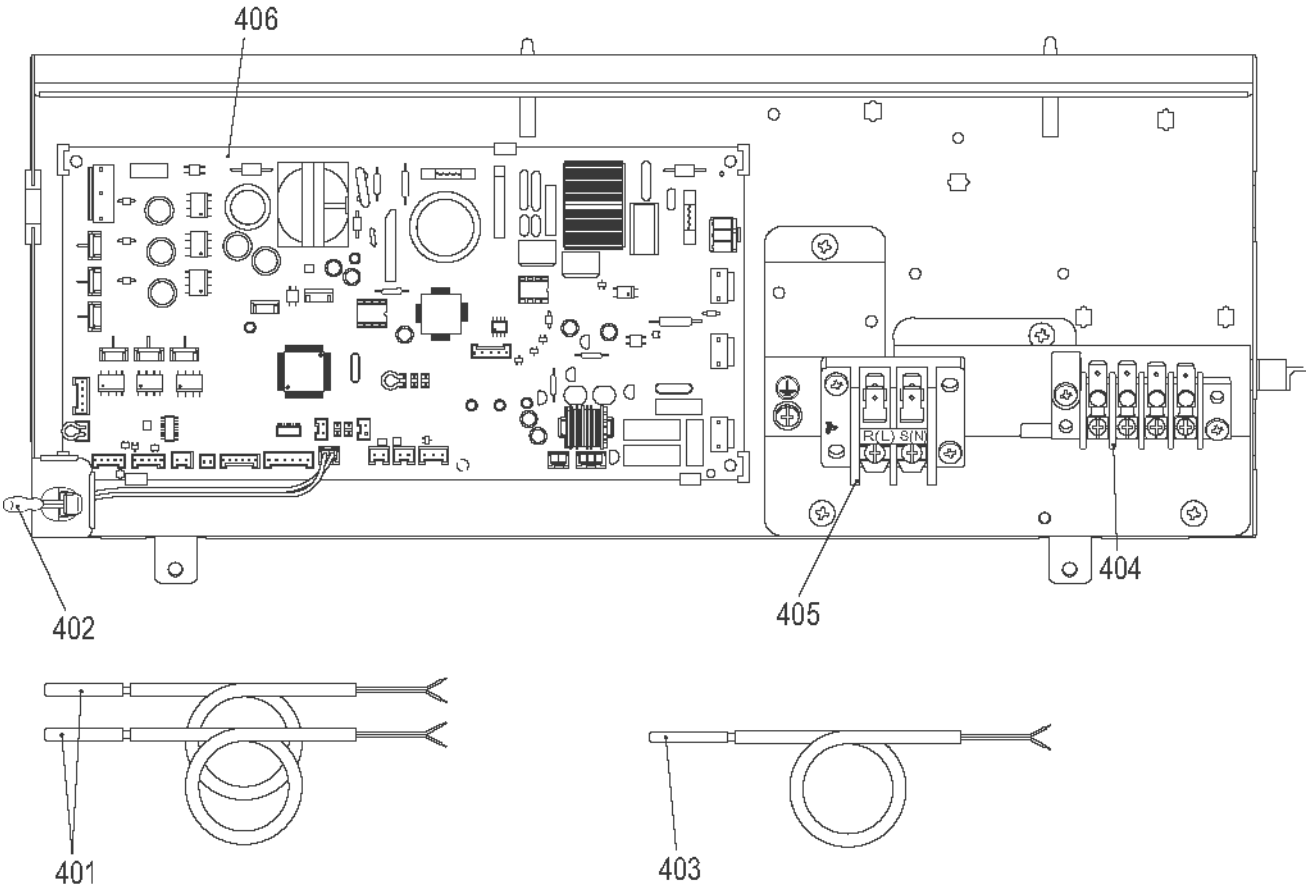

Location No.	Part No.	Description	MMU-		
			AP0154SH-E(TR)	AP0184SH-E(TR)	AP0244SH-E(TR)
401	43050425	SENSOR ASSY, SERVICE, TC	2	2	2
402	43050426	SENSOR, SERVICE, TA	1	1	1
403	43150320	SENSOR ASSY, SERVICE, TG	1	1	1
404	43160582	TERMINAL, 4P	1	1	1
405	43160575	TERMINAL BLOCK, 2P, 20A	1	1	1
406	4316V437	P.C. BOARD ASSY, MCC-1402	1	1	1

9-3. Compact 4-way cassette type

MMU-AP0054MH∗, AP0074MH∗, AP0094MH∗, AP0124MH∗, AP0154MH∗, AP0184MH∗

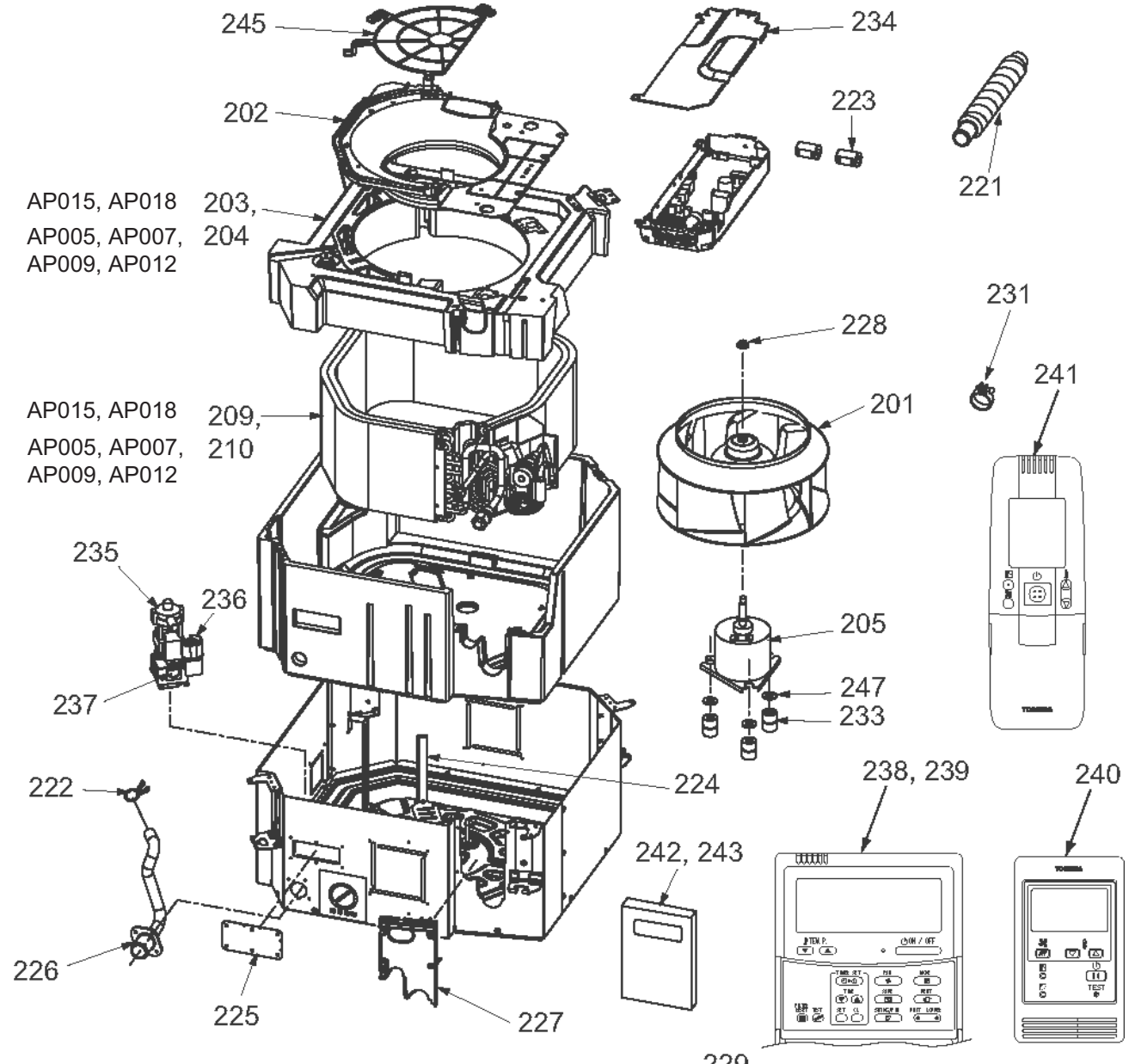

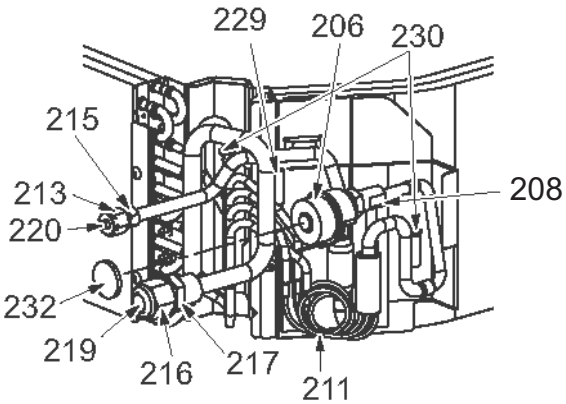

AP015, AP018

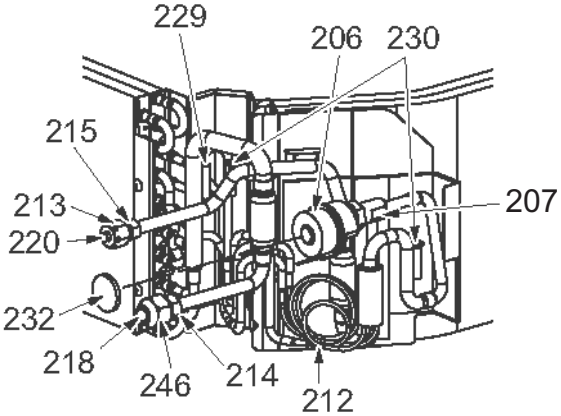

AP005, AP007, AP009, AP012

Location No.	Part No.	Description	MMU-AP∗∗∗4MH-E					
			005	007	009	012	015	018
201	43120225	FAN, ASSY TURBO	1	1	1	1	1	1
202	43122094	BELLMOUTH	1	1	1	1	1	1
203	43172185	PAN ASSY, DRAIN					1	1
204	43172216	PAN ASSY, DRAIN	1	1	1	1		
205	43121738	MOTOR, FAN	1	1	1	1	1	1
206	4314N106	MOTOR, PMV	1	1	1	1	1	1
207	43146713	VALVE, PMV	1	1	1	1		
208	43146714	VALVE, PMV					1	1
209	4314J263	REFRIGERATION CYCLE ASSY					1	1
210	4314J264	REFRIGERATION CYCLE ASSY	1	1	1	1		
211	4314Q006	DISTRIBUTOR ASSY					1	1
212	4314Q007	DISTRIBUTOR ASSY	1	1	1	1		
213	43F47685	NUT, FLARE, 1/4 IN	1	1	1	1	1	1
214	43049776	SOCKET	1	1	1	1		
215	43149351	SOCKET	1	1	1	1	1	1
216	43047688	NUT, FLARE, 1/2, IN					1	1
217	43149353	SOCKET					1	1
218	43F47609	BONNET	1	1	1	1		
219	43147195	BONNET, 1/2 IN					1	1
220	43F49697	BONNET	1	1	1	1	1	1
221	43170244	HOSE, DRAIN	1	1	1	1	1	1
222	43079249	BAND, HOSE	1	1	1	1	1	1
223	43F60029	FILTER,NOISE	2	2	2	2	2	2
224	43163052	HOLDER, LEAD, FAN MOTOR	1	1	1	1	1	1
225	43119482	COVER, ASSY BODY	1	1	1	1	1	1
226	43170248	HOSE, DRAIN	1	1	1	1	1	1
227	43119483	COVER, PIPE	1	1	1	1	1	1
228	43F97212	NUT	1	1	1	1	1	1
229	43107215	HOLDER, SENSOR	1	1	1	1	1	1
230	43F19904	HOLDER, SENSOR (TS)	2	2	2	2	2	2
231	43179135	BAND, HOSE	1	1	1	1	1	1
232	43149314	SHEET, PMV	1	1	1	1	1	1
233	43139137	RUBBER, CUSHION	3	3	3	3	3	3
234	43162056	COVER, E-BOX	1	1	1	1	1	1
235	43177001	PUMP, DRAIN	1	1	1	1	1	1
236	43151289	SWITCH, FLOAT	1	1	1	1	1	1
237	43179126	RUBBER, PUMP DRAIN	3	3	3	3	3	3
238	43166011	REMOTE CONTROLLER, SX-A4EE	1	1	1	1	1	1
239	43166012	REMOTE CONTROLLER, SX-A5EE	1	1	1	1	1	1
240	43166004	REMOTE CONTROLLER, SX-A11JE2	1	1	1	1	1	1
241	43166006	REMOTE CONTROLLER, WH-H1JE2	1	1	1	1	1	1
242	431S8205	OWNER'S MANUAL, MMY-MAP0804HT8-E	1	1	1	1	1	1
245	43119475	GUARD FAN	1	1	1	1	1	1
246	43149355	NUT, FLARE, 3/8, IN	1	1	1	1		
247	43197155	WASHER	3	3	3	3	3	3

Location No.	Part No.	Description	MMU-AP∗∗∗4MH-TR					
			005	007	009	012	015	018
201	43120225	FAN, ASSY TURBO	1	1	1	1	1	1
202	43122094	BELLMOUTH	1	1	1	1	1	1
203	43172185	PAN ASSY, DRAIN					1	1
204	43172216	PAN ASSY, DRAIN	1	1	1	1		
205	43121738	MOTOR, FAN	1	1	1	1	1	1
206	4314N106	MOTOR, PMV	1	1	1	1	1	1
207	43146713	VALVE, PMV	1	1	1	1		
208	43146714	VALVE, PMV					1	1
209	4314J263	REFRIGERATION CYCLE ASSY					1	1
210	4314J264	REFRIGERATION CYCLE ASSY	1	1	1	1		
211	4314Q006	DISTRIBUTOR ASSY					1	1
212	4314Q007	DISTRIBUTOR ASSY	1	1	1	1		
213	43F47685	NUT, FLARE, 1/4 IN	1	1	1	1	1	1
214	43049776	SOCKET	1	1	1	1		
215	43149351	SOCKET	1	1	1	1	1	1
216	43047688	NUT, FLARE, 1/2, IN					1	1
217	43149353	SOCKET					1	1
218	43F47609	BONNET	1	1	1	1		
219	43147195	BONNET, 1/2 IN					1	1
220	43F49697	BONNET	1	1	1	1	1	1
221	43170244	HOSE, DRAIN	1	1	1	1	1	1
222	43079249	BAND, HOSE	1	1	1	1	1	1
223	43F60029	FILTER,NOISE	2	2	2	2	2	2
224	43163052	HOLDER, LEAD, FAN MOTOR	1	1	1	1	1	1
225	43119482	COVER, ASSY BODY	1	1	1	1	1	1
226	43170248	HOSE, DRAIN	1	1	1	1	1	1
227	43119483	COVER, PIPE	1	1	1	1	1	1
228	43F97212	NUT	1	1	1	1	1	1
229	43107215	HOLDER, SENSOR	1	1	1	1	1	1
230	43F19904	HOLDER, SENSOR (TS)	2	2	2	2	2	2
231	43179135	BAND, HOSE	1	1	1	1	1	1
232	43149314	SHEET, PMV	1	1	1	1	1	1
233	43139137	RUBBER, CUSHION	3	3	3	3	3	3
234	43162056	COVER, E-BOX	1	1	1	1	1	1
235	43177001	PUMP, DRAIN	1	1	1	1	1	1
236	43151289	SWITCH, FLOAT	1	1	1	1	1	1
237	43179126	RUBBER, PUMP DRAIN	3	3	3	3	3	3
238	43166011	REMOTE CONTROLLER, SX-A4EE	1	1	1	1	1	1
239	43166012	REMOTE CONTROLLER, SX-A5EE	1	1	1	1	1	1
240	43166004	REMOTE CONTROLLER, SX-A11JE2	1	1	1	1	1	1
241	43166006	REMOTE CONTROLLER, WH-H1JE2	1	1	1	1	1	1
243	431S8206	OWNER'S MANUAL, MMY-MAP0804HT8-TR	1	1	1	1	1	1
245	43119475	GUARD FAN	1	1	1	1	1	1
246	43149355	NUT, FLARE, 3/8, IN	1	1	1	1		
247	43197155	WASHER	3	3	3	3	3	3

E-Parts

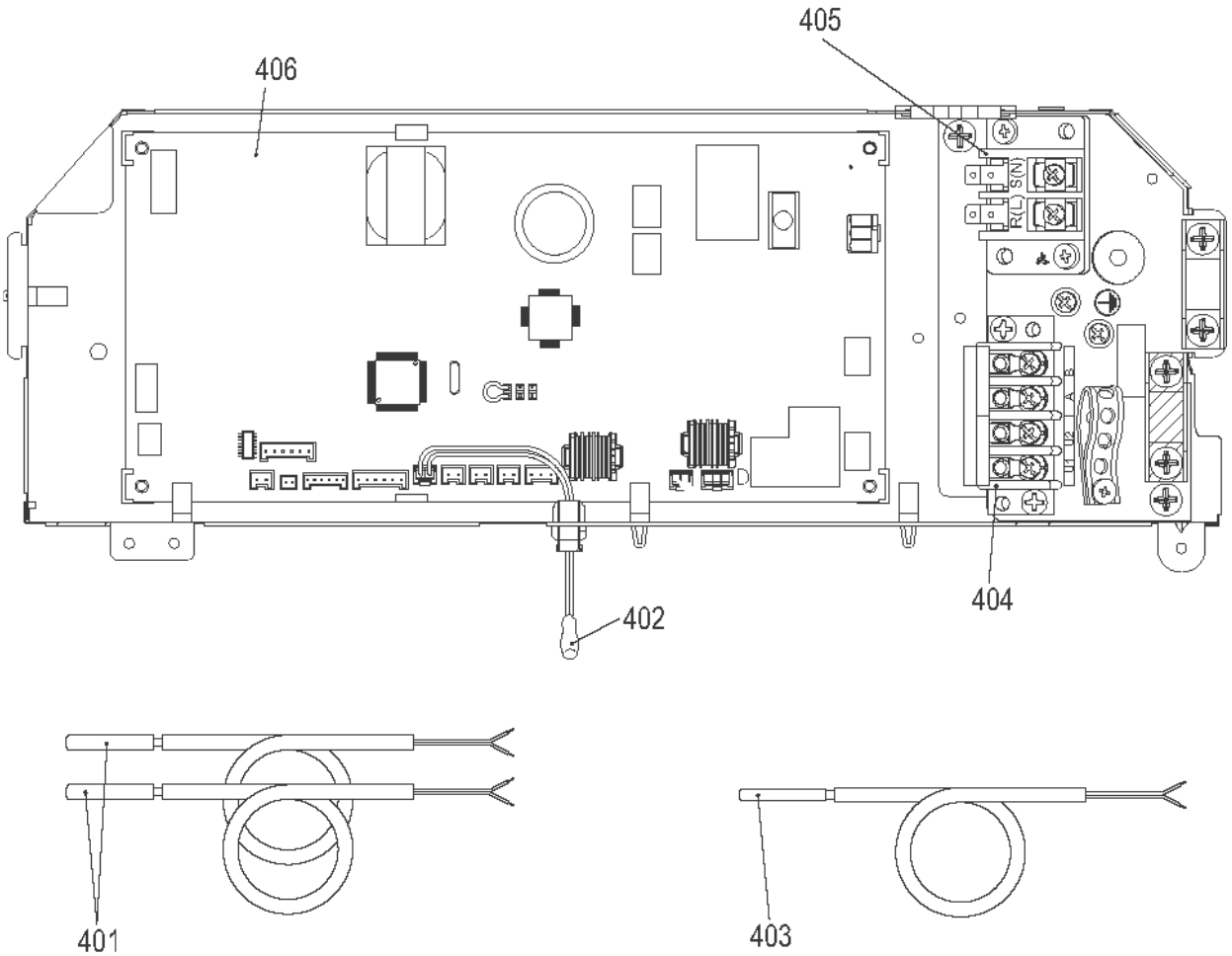

Location No.	Part No.	Description	MMU-AP∗∗∗4MH-E (TR)					
			005	007	009	012	015	018
401	43050425	SENSOR ASSY, SERVICE, TC	2	2	2	2	2	2
402	43F50426	SENS0R, SERVICE, TA	1	1	1	1	1	1
403	43150320	SENSOR ASSY, SERVICE, TG	1	1	1	1	1	1
404	43160582	TERMINAL, 4P	1	1	1	1	1	1
405	43160575	TERMINAL BLOCK, 2P, 20A	1	1	1	1	1	1
406	4316V437	P.C. BOARD ASSY, MCC-1402	1	1	1	1	1	1

9-4. Slim duct type

MMD-AP0054SPH∗, AP0074SPH∗, AP0094SPH∗, AP0124SPH∗, AP0154SPH∗, AP0184SPH∗

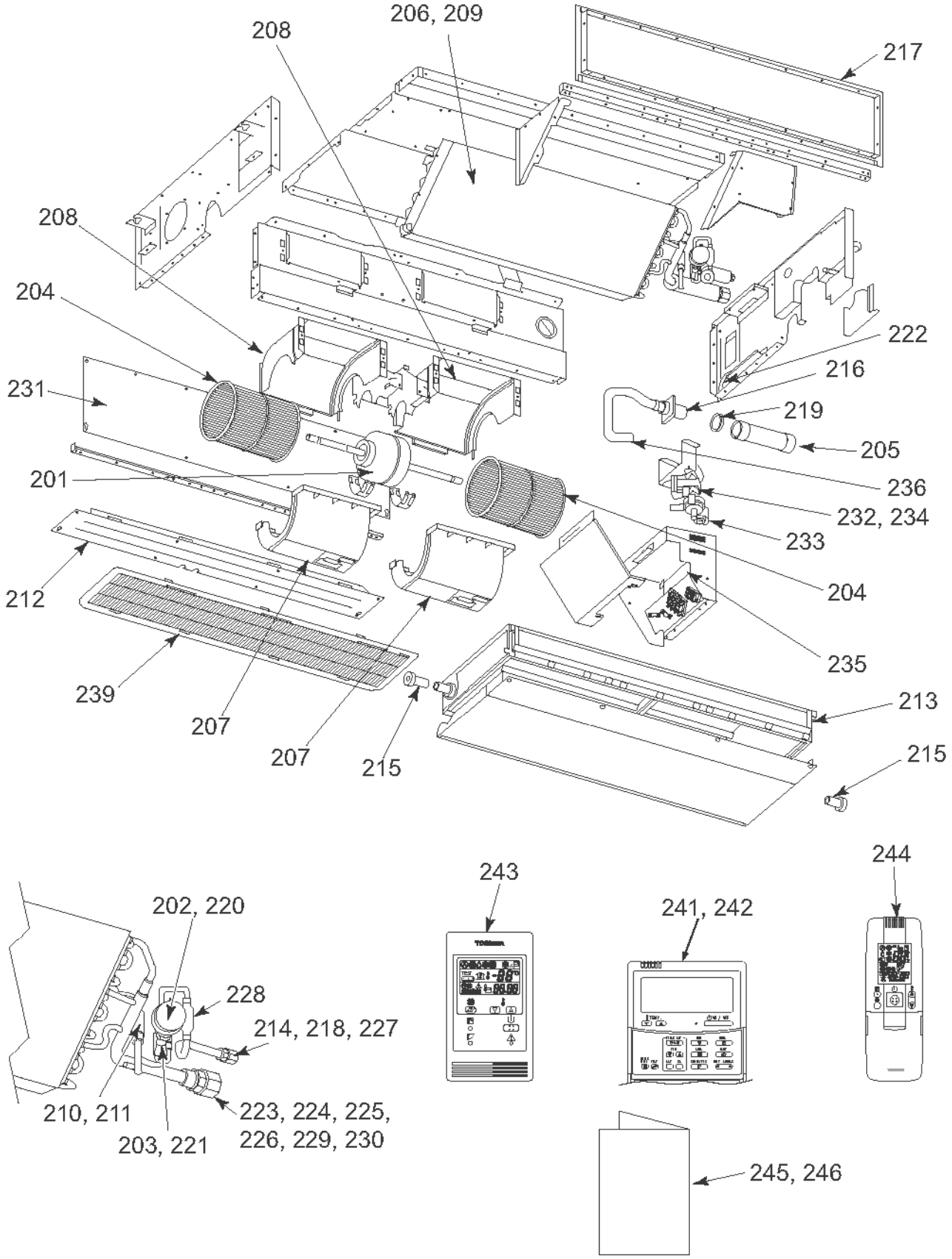

Location No.	Part No.	Description	MMD-AP∗∗∗4SPH-E					
			005	007	009	012	015	018
201	43121742	MOTOR, FAN	1	1	1	1	1	1
202	4314N106	MOTOR, PMV	1	1	1	1	1	1
203	43146713	VALVE, PMV	1	1	1	1		
204	43120227	FAN, MULTI BLADE	2	2	2	2	2	2
205	43170244	HOSE, DRAIN	1	1	1	1	1	1
206	4314J426	EVAPORATOR ASSY					1	1
207	43122084	CASE, FAN, LOWER	2	2	2	2	2	2
208	43122085	CASE, FAN, UPPER	2	2	2	2	2	2
209	4314J432	EVAPORATOR ASSY	1	1	1	1		
210	4314Q082	DISTRIBUTOR ASSY	1	1	1	1		
211	4314Q083	DISTRIBUTOR ASSY					1	1
212	43100319	PLATE, INLET-B	1	1	1	1	1	1
213	43172183	PAN ASSY, DRAIN	1	1	1	1	1	1
214	43149351	SOCKET	1	1	1	1	1	1
215	43179129	CAP DRAIN	2	2	2	2	2	2
216	43170240	HOSE, DRAIN	1	1	1	1	1	1
217	43100321	FLANGE	1	1	1	1	1	1
218	43F49697	BONNET	1	1	1	1	1	1
219	43179135	BAND, HOSE	1	1	1	1	1	1
220	43149314	SHEET, PMV	1	1	1	1	1	1
221	43146714	VALVE, PMV					1	1
222	43196109	BUSHING	1	1	1	1	1	1
223	43049776	SOCKET	1	1	1	1		
224	43149353	SOCKET					1	1
225	43047688	NUT, FLARE, 1/2, IN					1	1
226	43149355	NUT, FLARE, 3/8, IN	1	1	1	1		
227	43F47685	NUT, FLARE, 1/4 IN	1	1	1	1	1	1
228	43147662	STRAINER	1	1	1	1	1	1
229	43F47609	BONNET	1	1	1	1		
230	43047692	BONNET					1	1
231	43100320	PLATE, INLET-A	1	1	1	1	1	1
232	43121735	PUMP, DRAIN, ADP-1409	1	1	1	1	1	1
233	43151302	SWITCH, FLOAT	1	1	1	1	1	1
234	43179126	RUBBER, PUMP DRAIN	3	3	3	3	3	3
235	43F60029	FILTER,NOISE	1	1	1	1	1	1
236	43079249	BAND, HOSE	1	1	1	1	1	1
239	43180327	AIR FILTER	1	1	1	1	1	1
241	43166011	REMOTE CONTROLLER, SX-A4EE	1	1	1	1	1	1
242	43166012	REMOTE CONTROLLER, SX-A5EE	1	1	1	1	1	1
243	43166004	REMOTE CONTROLLER, SX-A11JE2	1	1	1	1	1	1
244	43166006	REMOTE CONTROLLER, WH-H1JE2	1	1	1	1	1	1
245	431S8205	OWNER'S MANUAL, MMY-MAP0804HT8-E	1	1	1	1	1	1

Location No.	Part No.	Description	MMD-AP***4SPH-TR					
			005	007	009	012	015	018
201	43121742	MOTOR, FAN	1	1	1	1	1	1
202	4314N106	MOTOR, PMV	1	1	1	1	1	1
203	43146713	VALVE, PMV	1	1	1	1		
204	43120227	FAN, MULTI BLADE	2	2	2	2	2	2
205	43170244	HOSE, DRAIN	1	1	1	1	1	1
206	4314J426	EVAPORATOR ASSY					1	1
207	43122084	CASE, FAN, LOWER	2	2	2	2	2	2
208	43122085	CASE, FAN, UPPER	2	2	2	2	2	2
209	4314J432	EVAPORATOR ASSY	1	1	1	1		
210	4314Q082	DISTRIBUTOR ASSY	1	1	1	1		
211	4314Q083	DISTRIBUTOR ASSY					1	1
212	43100319	PLATE, INLET-B	1	1	1	1	1	1
213	43172183	PAN ASSY, DRAIN	1	1	1	1	1	1
214	43149351	SOCKET	1	1	1	1	1	1
215	43179129	CAP DRAIN	2	2	2	2	2	2
216	43170240	HOSE, DRAIN	1	1	1	1	1	1
217	43100321	FLANGE	1	1	1	1	1	1
218	43F49697	BONNET	1	1	1	1	1	1
219	43179135	BAND, HOSE	1	1	1	1	1	1
220	43149314	SHEET, PMV	1	1	1	1	1	1
221	43146714	VALVE, PMV					1	1
222	43196109	BUSHING	1	1	1	1	1	1
223	43049776	SOCKET	1	1	1	1		
224	43149353	SOCKET					1	1
225	43047688	NUT, FLARE, 1/2, IN					1	1
226	43149355	NUT, FLARE, 3/8, IN	1	1	1	1		
227	43F47685	NUT, FLARE, 1/4 IN	1	1	1	1	1	1
228	43147662	STRAINER	1	1	1	1	1	1
229	43F47609	BONNET	1	1	1	1		
230	43047692	BONNET					1	1
231	43100320	PLATE, INLET-A	1	1	1	1	1	1
232	43121735	PUMP, DRAIN, ADP-1409	1	1	1	1	1	1
233	43151302	SWITCH, FLOAT	1	1	1	1	1	1
234	43179126	RUBBER, PUMP DRAIN	3	3	3	3	3	3
235	43F60029	FILTER,NOISE	1	1	1	1	1	1
236	43079249	BAND, HOSE	1	1	1	1	1	1
239	43180327	AIR FILTER	1	1	1	1	1	1
241	43166011	REMOTE CONTROLLER, SX-A4EE	1	1	1	1	1	1
242	43166012	REMOTE CONTROLLER, SX-A5EE	1	1	1	1	1	1
243	43166004	REMOTE CONTROLLER, SX-A11JE2	1	1	1	1	1	1
244	43166006	REMOTE CONTROLLER, WH-H1JE2	1	1	1	1	1	1
246	431S8206	OWNER'S MANUAL, MMY-MAP0804HT8-TR	1	1	1	1	1	1

E-Parts

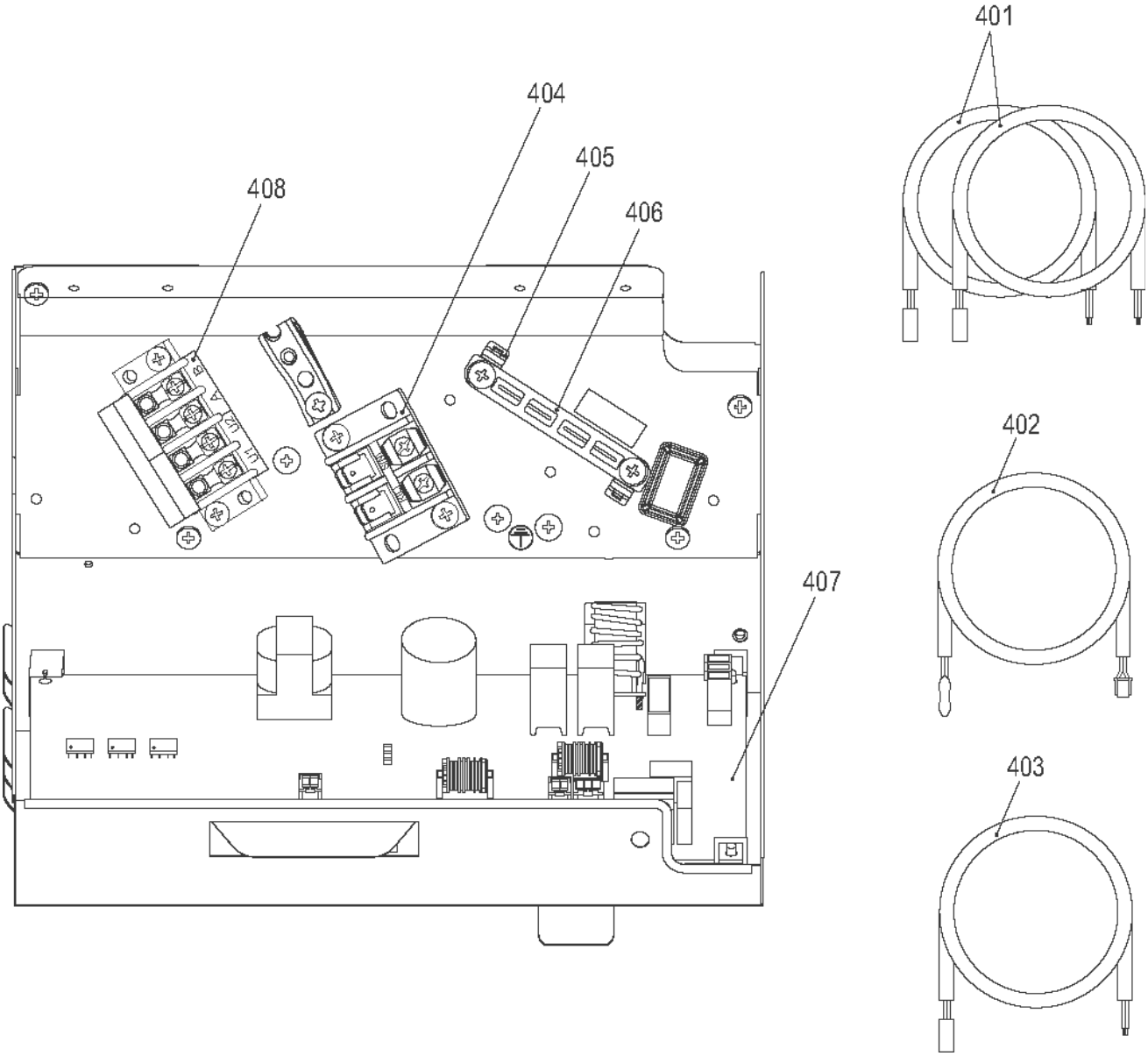

Location No.	Part No.	Description	MMD-AP∗∗∗4SPH-E (TR)					
			005	007	009	012	015	018
401	43050425	SENSOR ASSY, SERVICE, TC	2	2	2	2	2	2
402	43F50426	SENSOR, SERVICE, TA	1	1	1	1	1	1
403	43150320	SENSOR ASSY, SERVICE, TG	1	1	1	1	1	1
404	43160575	TERMINAL BLOCK, 2P, 20A	1	1	1	1	1	1
405	43163057	CLAMP, DOWN	1	1	1	1	1	1
406	43163058	CLAMP, UP	1	1	1	1	1	1
407	4316V437	P.C. BOARD ASSY, MCC-1402	1	1	1	1	1	1
408	43160582	TERMINAL, 4P	1	1	1	1	1	1

9-5. Concealed duct standard type

MMD-AP0074BH∗, AP0094BH∗, AP0124BH∗, AP0154BH∗, AP0184BH∗

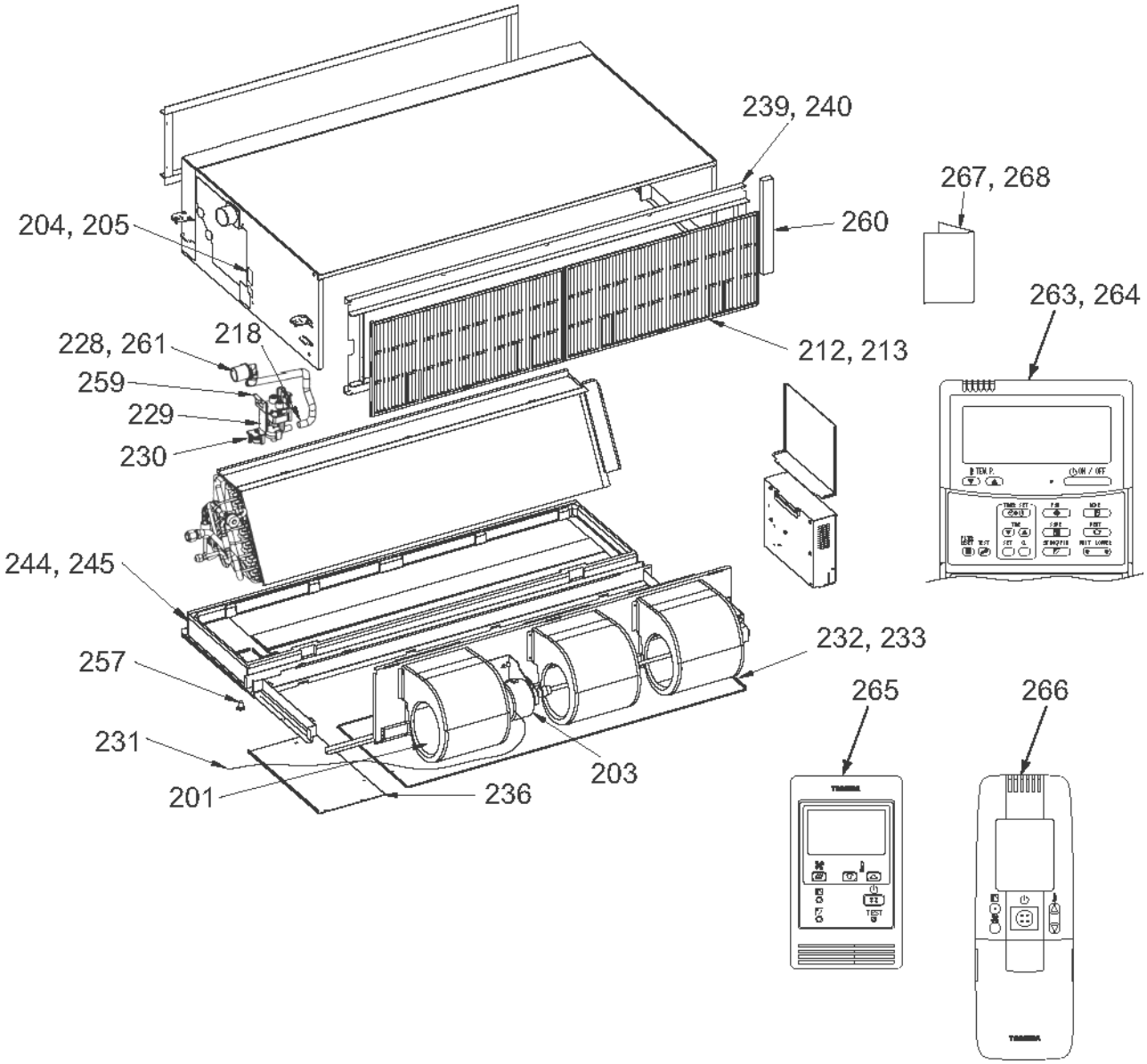

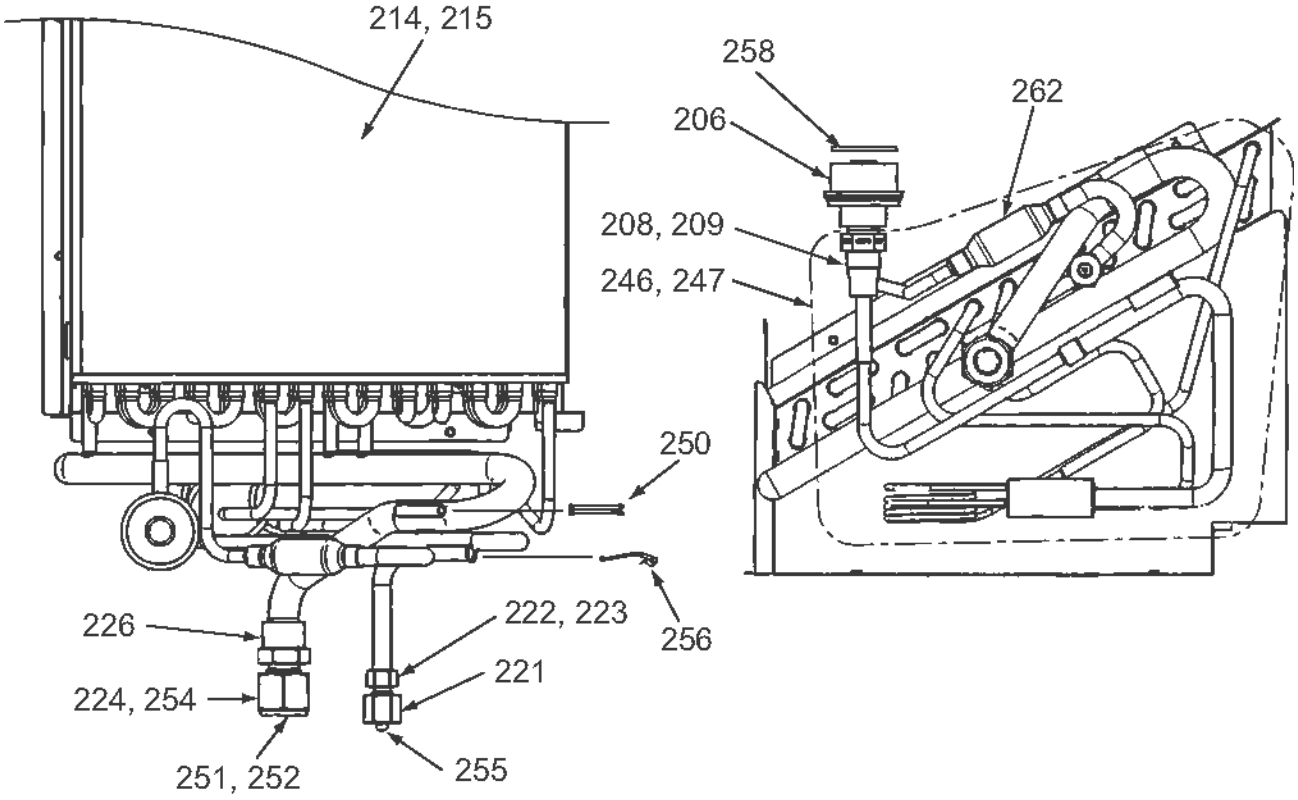
214, 215
258
262
206
208, 209
246, 247
250
226
222, 223
256
221
224, 254
251, 252
255

Location No.	Part No.	Description	MMD-				
			AP0074BH-E	AP0094BH-E	AP0124BH-E	AP0154BH-E	AP0184BH-E
201	43120239	FAN, MULTI BLADE	1	1	1	1	1
203	4312C021	MOTOR, FAN	1	1	1	1	1
204	43096078	BUSHING	1	1	1	1	1
205	43196012	BUSHING	2	2	2	2	2
206	43146707	MOTOR, PMV	1	1	1	1	1
208	43146713	VALVE, PMV	1	1	1		
209	43146714	VALVE, PMV				1	1
212	43180321	AIR FILTER				1	1
213	43180322	AIR FILTER	1	1	1		
214	4314J422	EVAPORATOR ASSY	1	1	1		
215	4314J423	EVAPORATOR ASSY				1	1
218	43079249	BAND, HOSE	1	1	1	1	1
221	43047685	NUT, FLARE, 1/4 IN	1	1	1	1	1
222	43049776	SOCKET	1	1	1		
223	43149351	SOCKET	1	1	1	1	1
224	43047688	NUT, FLARE, 1/2, IN				1	1
226	43149353	SOCKET				1	1
228	43070146	HOSE, DRAIN	1	1	1	1	1
229	43121747	PUMP ASSY, WIRING	1	1	1	1	1
230	43151294	SWITCH, FLOAT	1	1	1	1	1
231	43160553	LEAD, MOTOR, FAN	1	1	1	1	1
232	43100284	PLATE ASSY, A	1	1	1		
233	43100285	PLATE ASSY, A				1	1
236	43100288	PLATE, B	1	1	1	1	1
239	43100291	FLANGE				1	1
240	43100292	FLANGE	1	1	1		
244	43172168	PAN ASSY, DRAIN				1	1
245	43172169	PAN ASSY, DRAIN	1	1	1		
246	4314Q039	DISTRIBUTOR ASSY	1	1	1		
247	4314Q040	DISTRIBUTOR ASSY				1	1
250	43107215	HOLDER, SENSOR	1	1	1	1	1
251	43047609	BONNET	1	1	1		
252	43047692	BONNET				1	1
254	43047686	NUT, FLARE, 3/8 IN	1	1	1		
255	43049697	BONNET	1	1	1	1	1
256	43019904	HOLDER, SENSOR (TS)	2	2	2	2	2
257	43179110	PLUG	1	1	1	1	1
258	43149314	SHEET, PMV	1	1	1	1	1
259	43179126	RUBBER, PUMP DRAIN	3	3	3	3	3
260	43119468	PLATE ASSY	1	1	1	1	1
261	43170233	HOSE, DRAIN	1	1	1	1	1
262	43147664	STRAINER	2	2	2	1	1
263	43166011	REMOTE CONTROLLER, SX-A4EE	1	1	1	1	1
264	43166012	REMOTE CONTROLLER, SX-A5EE	1	1	1	1	1
265	43166004	REMOTE CONTROLLER, SX-A11JE2	1	1	1	1	1
266	43166006	REMOTE CONTROLLER, WH-H1JE2	1	1	1	1	1
267	431S8205	OWNER'S MANUAL, MMY-MAP0804HT8-E	1	1	1	1	1

Location No.	Part No.	Description	MMD-				
			AP0074BH-TR	AP0094BH-TR	AP0124BH-TR	AP0154BH-TR	AP0184BH-TR
201	43120239	FAN, MULTI BLADE	1	1	1	1	1
203	4312C021	MOTOR, FAN	1	1	1	1	1
204	43096078	BUSHING	1	1	1	1	1
205	43196012	BUSHING	2	2	2	2	2
206	43146707	MOTOR, PMV	1	1	1	1	1
208	43146713	VALVE, PMV	1	1	1		
209	43146714	VALVE, PMV				1	1
212	43180321	AIR FILTER				1	1
213	43180322	AIR FILTER	1	1	1		
214	4314J422	EVAPORATOR ASSY	1	1	1		
215	4314J423	EVAPORATOR ASSY				1	1
218	43079249	BAND, HOSE	1	1	1	1	1
221	43047685	NUT, FLARE, 1/4 IN	1	1	1	1	1
222	43049776	SOCKET	1	1	1		
223	43149351	SOCKET	1	1	1	1	1
224	43047688	NUT, FLARE, 1/2, IN				1	1
226	43149353	SOCKET				1	1
228	43070146	HOSE, DRAIN	1	1	1	1	1
229	43121747	PUMP ASSY, WIRING	1	1	1	1	1
230	43151294	SWITCH, FLOAT	1	1	1	1	1
231	43160553	LEAD, MOTOR, FAN	1	1	1	1	1
232	43100284	PLATE ASSY, A	1	1	1		
233	43100285	PLATE ASSY, A				1	1
236	43100288	PLATE, B	1	1	1	1	1
239	43100291	FLANGE				1	1
240	43100292	FLANGE	1	1	1		
244	43172168	PAN ASSY, DRAIN				1	1
245	43172169	PAN ASSY, DRAIN	1	1	1		
246	4314Q039	DISTRIBUTOR ASSY	1	1	1		
247	4314Q040	DISTRIBUTOR ASSY				1	1
250	43107215	HOLDER, SENSOR	1	1	1	1	1
251	43047609	BONNET	1	1	1		
252	43047692	BONNET				1	1
254	43047686	NUT, FLARE, 3/8 IN	1	1	1		
255	43049697	BONNET	1	1	1	1	1
256	43019904	HOLDER, SENSOR (TS)	2	2	2	2	2
257	43179110	PLUG	1	1	1	1	1
258	43149314	SHEET, PMV	1	1	1	1	1
259	43179126	RUBBER, PUMP DRAIN	3	3	3	3	3
260	43119468	PLATE ASSY	1	1	1	1	1
261	43170233	HOSE, DRAIN	1	1	1	1	1
262	43147664	STRAINER	2	2	2	1	1
263	43166011	REMOTE CONTROLLER, SX-A4EE	1	1	1	1	1
264	43166012	REMOTE CONTROLLER, SX-A5EE	1	1	1	1	1
265	43166004	REMOTE CONTROLLER, SX-A11JE2	1	1	1	1	1
266	43166006	REMOTE CONTROLLER, WH-H1JE2	1	1	1	1	1
268	431S8206	OWNER'S MANUAL, MMY-MAP0804HT8-TR	1	1	1	1	1

MMD-AP0244BH*, AP0274BH*, AP0304BH*, AP0364BH*, AP0484BH*

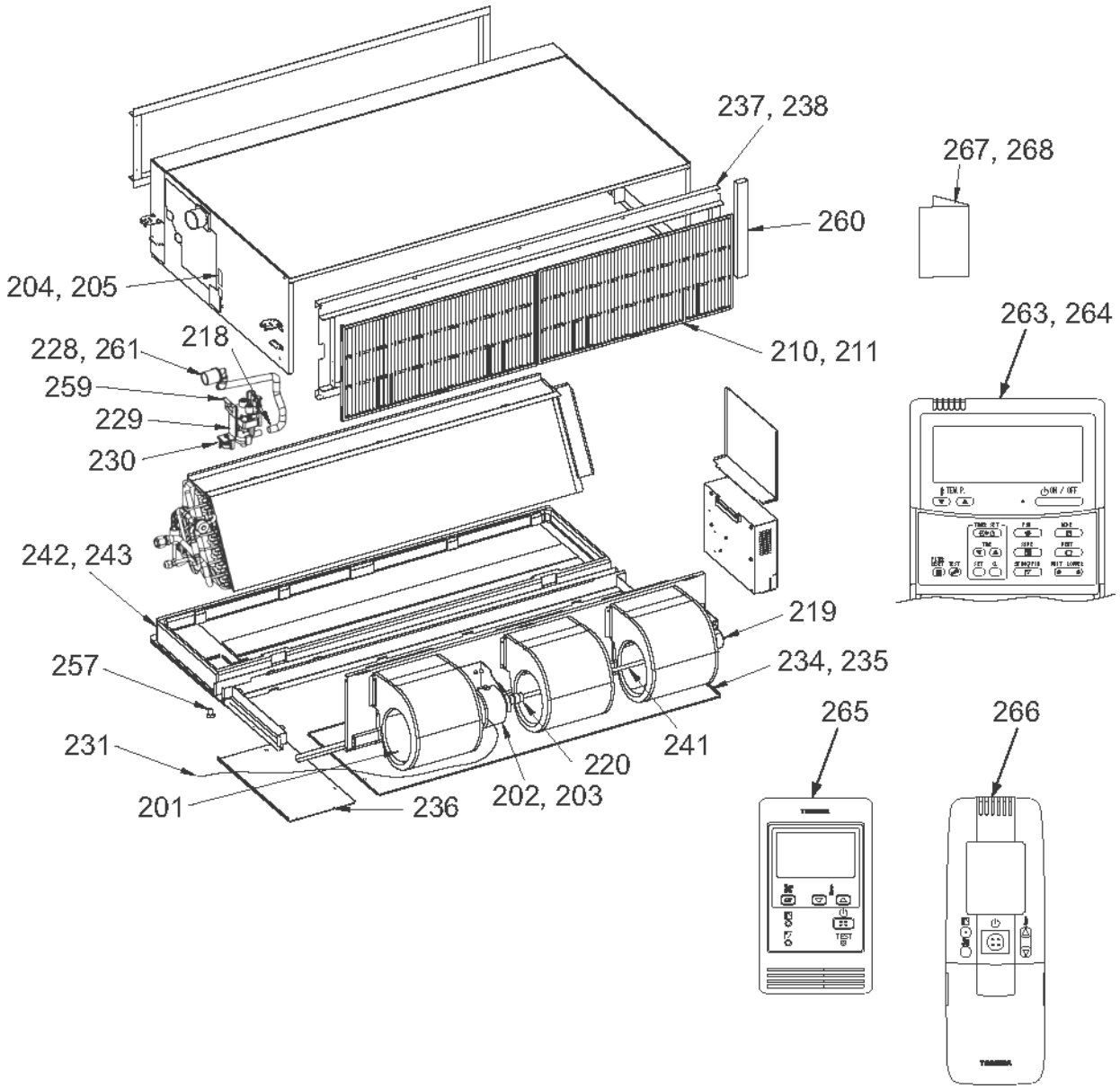

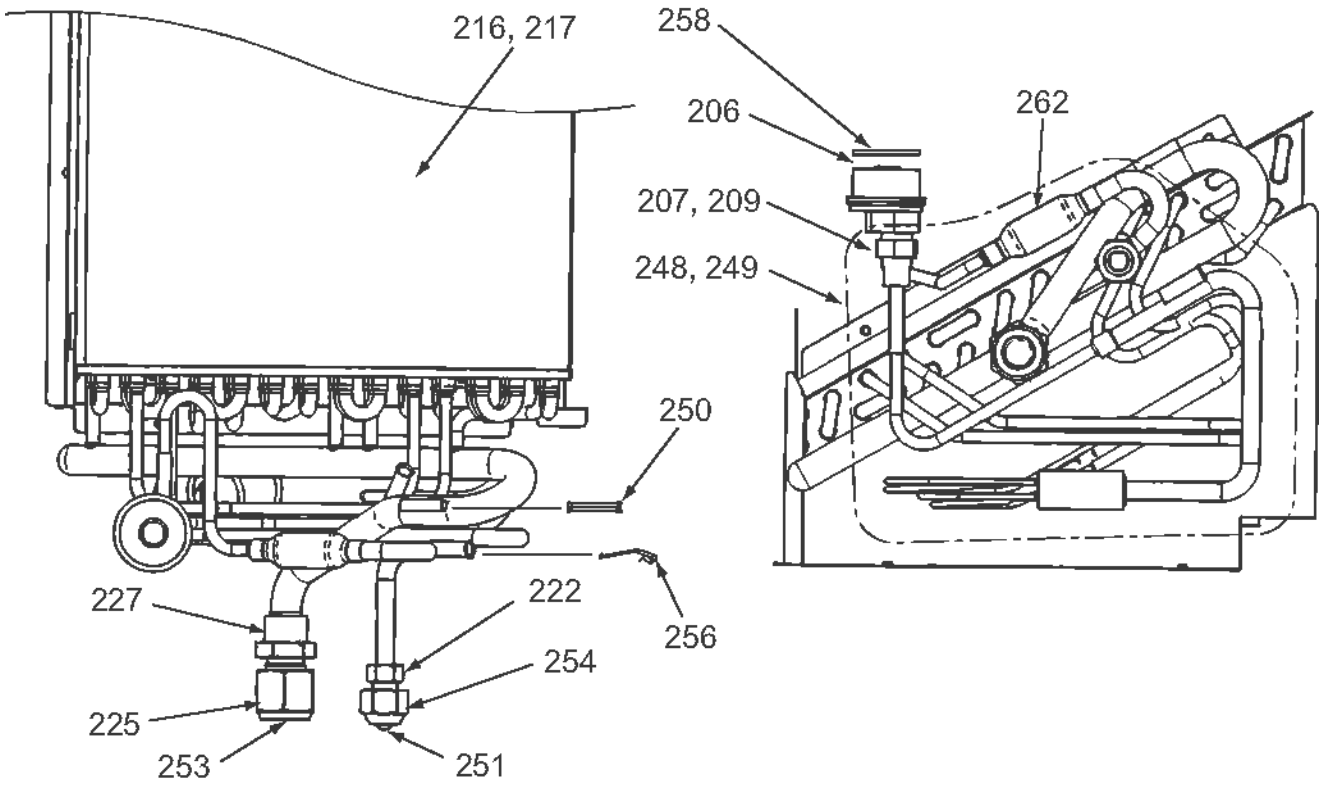
216, 217
258
206
262
207, 209
248, 249
250
227
222
256
254
225
253
251

Location No.	Part No.	Description	MMD-				
			AP0244BH-E	AP0274BH-E	AP0304BH-E	AP0364BH-E	AP0484BH-E
201	43120239	FAN, MULTI BLADE	2	2	2	3	3
202	4312C020	MOTOR, FAN	1	1	1		
203	4312C021	MOTOR, FAN				1	1
204	43096078	BUSHING	1	1	1	1	1
205	43196012	BUSHING	2	2	2	2	2
206	43146707	MOTOR, PMV	1	1	1	1	1
207	43146723	BODY, PMV				1	1
209	43146714	VALVE, PMV	1	1	1		
210	43180319	AIR FILTER				2	2
211	43180320	AIR FILTER	2	2	2		
216	4314J424	EVAPORATOR ASSY	1	1	1		
217	4314J425	EVAPORATOR ASSY				1	1
218	43079249	BAND, HOSE	1	1	1	1	1
219	43125131	BEARING, SHAFT				1	1
220	43125162	COUPLING				1	1
222	43049776	SOCKET	1	1	1	1	1
225	43149352	NUT, FLARE, 5/8, IN	1	1	1	1	1
227	43149354	SOCKET	1	1	1	1	1
228	43070146	HOSE, DRAIN	1	1	1	1	1
229	43121747	PUMP ASSY, WIRING	1	1	1	1	1
230	43151294	SWITCH, FLOAT	1	1	1	1	1
231	43160553	LEAD, MOTOR, FAN	1	1	1	1	1
234	43100286	PLATE ASSY, A	1	1	1		
235	43100287	PLATE ASSY, A				1	1
236	43100288	PLATE, B	1	1	1	1	1
237	43100289	FLANGE				1	1
238	43100290	FLANGE	1	1	1		
241	43125163	SHAFT				1	1
242	43172166	PAN ASSY, DRAIN				1	1
243	43172167	PAN ASSY, DRAIN	1	1	1		
248	4314Q041	DISTRIBUTOR ASSY	1	1	1		
249	4314Q042	DISTRIBUTOR ASSY				1	1
250	43107215	HOLDER, SENSOR	1	1	1	1	1
251	43047609	BONNET	1	1	1	1	1
253	43194029	BONNET	1	1	1	1	1
254	43047686	NUT, FLARE, 3/8 IN	1	1	1	1	1
256	43019904	HOLDER, SENSOR (TS)	2	2	2	2	2
257	43179110	PLUG	1	1	1	1	1
258	43149314	SHEET, PMV	1	1	1		
259	43179126	RUBBER, PUMP DRAIN	3	3	3	3	3
260	43119468	PLATE ASSY	1	1	1	1	1
261	43170233	HOSE, DRAIN	1	1	1	1	1
262	43147664	STRAINER	1	1	1	1	1
263	43166011	REMOTE CONTROLLER, SX-A4EE	1	1	1	1	1
264	43166012	REMOTE CONTROLLER, SX-A5EE	1	1	1	1	1
265	43166004	REMOTE CONTROLLER, SX-A11JE2	1	1	1	1	1
266	43166006	REMOTE CONTROLLER, WH-H1JE2	1	1	1	1	1
267	431S8205	OWNER'S MANUAL, MMY-MAP0804HT8-E	1	1	1	1	1

Location No.	Part No.	Description	MMD-				
			AP0244BH-TR	AP0274BH-TR	AP0304BH-TR	AP0364BH-TR	AP0484BH-TR
201	43120239	FAN, MULTI BLADE	2	2	2	3	3
202	4312C020	MOTOR, FAN	1	1	1		
203	4312C021	MOTOR, FAN				1	1
204	43096078	BUSHING	1	1	1	1	1
205	43196012	BUSHING	2	2	2	2	2
206	43146707	MOTOR, PMV	1	1	1	1	1
207	43146723	BODY, PMV				1	1
209	43146714	VALVE, PMV	1	1	1		
210	43180319	AIR FILTER				2	2
211	43180320	AIR FILTER	2	2	2		
216	4314J424	EVAPORATOR ASSY	1	1	1		
217	4314J425	EVAPORATOR ASSY				1	1
218	43079249	BAND, HOSE	1	1	1	1	1
219	43125131	BEARING, SHAFT				1	1
220	43125162	COUPLING				1	1
222	43049776	SOCKET	1	1	1	1	1
225	43149352	NUT, FLARE, 5/8, IN	1	1	1	1	1
227	43149354	SOCKET	1	1	1	1	1
228	43070146	HOSE, DRAIN	1	1	1	1	1
229	43121747	PUMP ASSY, WIRING	1	1	1	1	1
230	43151294	SWITCH, FLOAT	1	1	1	1	1
231	43160553	LEAD, MOTOR, FAN	1	1	1	1	1
234	43100286	PLATE ASSY, A	1	1	1		
235	43100287	PLATE ASSY, A				1	1
236	43100288	PLATE, B	1	1	1	1	1
237	43100289	FLANGE				1	1
238	43100290	FLANGE	1	1	1		
241	43125163	SHAFT				1	1
242	43172166	PAN ASSY, DRAIN				1	1
243	43172167	PAN ASSY, DRAIN	1	1	1		
248	4314Q041	DISTRIBUTOR ASSY	1	1	1		
249	4314Q042	DISTRIBUTOR ASSY				1	1
250	43107215	HOLDER, SENSOR	1	1	1	1	1
251	43047609	BONNET	1	1	1	1	1
253	43194029	BONNET	1	1	1	1	1
254	43047686	NUT, FLARE, 3/8 IN	1	1	1	1	1
256	43019904	HOLDER, SENSOR (TS)	2	2	2	2	2
257	43179110	PLUG	1	1	1	1	1
258	43149314	SHEET, PMV	1	1	1		
259	43179126	RUBBER, PUMP DRAIN	3	3	3	3	3
260	43119468	PLATE ASSY	1	1	1	1	1
261	43170233	HOSE, DRAIN	1	1	1	1	1
262	43147664	STRAINER	1	1	1	1	1
263	43166011	REMOTE CONTROLLER, SX-A4EE	1	1	1	1	1
264	43166012	REMOTE CONTROLLER, SX-A5EE	1	1	1	1	1
265	43166004	REMOTE CONTROLLER, SX-A11JE2	1	1	1	1	1
266	43166006	REMOTE CONTROLLER, WH-H1JE2	1	1	1	1	1
268	431S8206	OWNER'S MANUAL, MMY-MAP0804HT8-TR	1	1	1	1	1

MMD-AP0564BH***

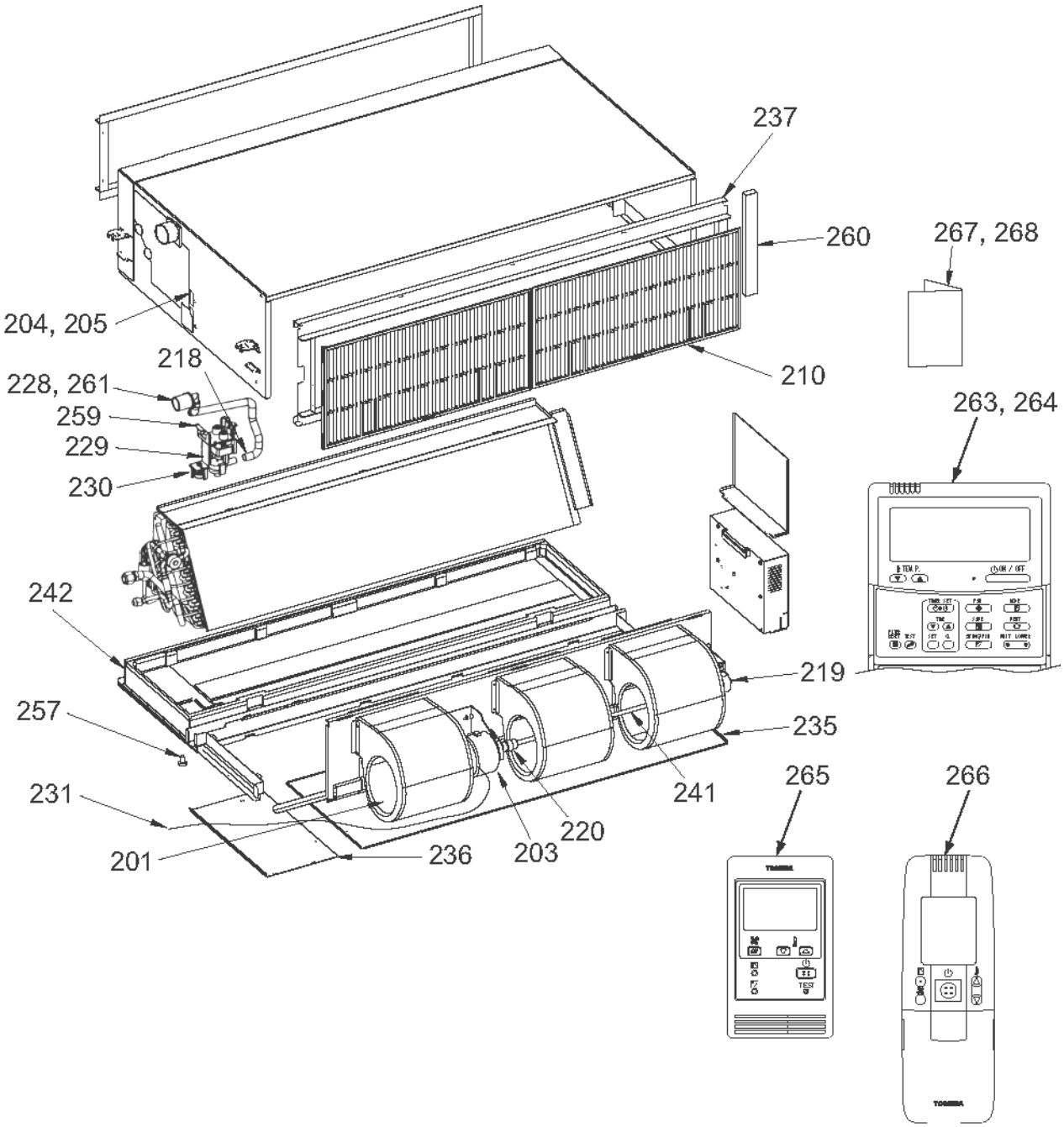

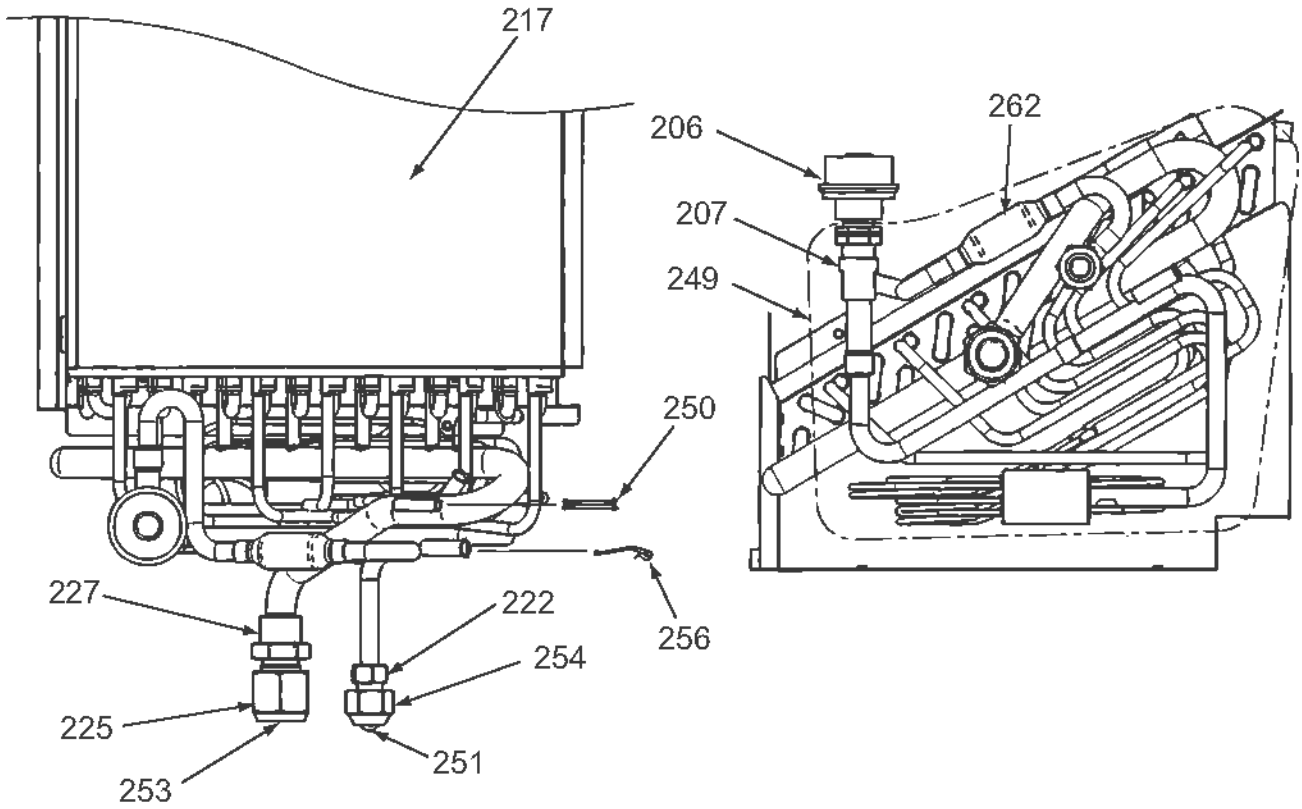
217
206
262
207
249
250
227
222
256
254
225
251
253

Location No.	Part No.	Description	MMD-AP0564BH-E
201	43120239	FAN, MULTI BLADE	3
203	4312C021	MOTOR, FAN	1
204	43096078	BUSHING	1
205	43196012	BUSHING	2
206	43146707	MOTOR, PMV	1
207	43146723	BODY, PMV	1
210	43180319	AIR FILTER	2
217	4314J425	EVAPORATOR ASSY	1
218	43079249	BAND, HOSE	1
219	43125131	BEARING, SHAFT	1
220	43125162	COUPLING	1
222	43049776	SOCKET	1
225	43149352	NUT, FLARE, 5/8, IN	1
227	43149354	SOCKET	1
228	43070146	HOSE, DRAIN	1
229	43121747	PUMP ASSY, WIRING	1
230	43151294	SWITCH, FLOAT	1
231	43160553	LEAD, MOTOR, FAN	1
235	43100287	PLATE ASSY, A	1
236	43100288	PLATE, B	1
237	43100289	FLANGE	1
241	43125163	SHAFT	1
242	43172166	PAN ASSY, DRAIN	1
249	4314Q042	DISTRIBUTOR ASSY	1
250	43107215	HOLDER, SENSOR	1
251	43047609	BONNET	1
253	43194029	BONNET	1
254	43047686	NUT, FLARE, 3/8 IN	1
256	43019904	HOLDER, SENSOR (TS)	2
257	43179110	PLUG	1
259	43179126	RUBBER, PUMP DRAIN	3
260	43119468	PLATE ASSY	1
261	43170233	HOSE, DRAIN	1
262	43147664	STRAINER	1
263	43166011	REMOTE CONTROLLER, SX-A4EE	1
264	43166012	REMOTE CONTROLLER, SX-A5EE	1
265	43166004	REMOTE CONTROLLER, SX-A11JE2	1
266	43166006	REMOTE CONTROLLER, WH-H1JE2	1
267	431S8205	OWNER'S MANUAL, MMY-MAP0804HT8-E	1

Location No.	Part No.	Description	MMD-AP0564BH-TR
201	43120239	FAN, MULTI BLADE	3
203	4312C021	MOTOR, FAN	1
204	43096078	BUSHING	1
205	43196012	BUSHING	2
206	43146707	MOTOR, PMV	1
207	43146723	BODY, PMV	1
210	43180319	AIR FILTER	2
217	4314J425	EVAPORATOR ASSY	1
218	43079249	BAND, HOSE	1
219	43125131	BEARING, SHAFT	1
220	43125162	COUPLING	1
222	43049776	SOCKET	1
225	43149352	NUT, FLARE, 5/8, IN	1
227	43149354	SOCKET	1
228	43070146	HOSE, DRAIN	1
229	43121747	PUMP ASSY, WIRING	1
230	43151294	SWITCH, FLOAT	1
231	43160553	LEAD, MOTOR, FAN	1
235	43100287	PLATE ASSY, A	1
236	43100288	PLATE, B	1
237	43100289	FLANGE	1
241	43125163	SHAFT	1
242	43172166	PAN ASSY, DRAIN	1
249	4314Q042	DISTRIBUTOR ASSY	1
250	43107215	HOLDER, SENSOR	1
251	43047609	BONNET	1
253	43194029	BONNET	1
254	43047686	NUT, FLARE, 3/8 IN	1
256	43019904	HOLDER, SENSOR (TS)	2
257	43179110	PLUG	1
259	43179126	RUBBER, PUMP DRAIN	3
260	43119468	PLATE ASSY	1
261	43170233	HOSE, DRAIN	1
262	43147664	STRAINER	1
263	43166011	REMOTE CONTROLLER, SX-A4EE	1
264	43166012	REMOTE CONTROLLER, SX-A5EE	1
265	43166004	REMOTE CONTROLLER, SX-A11JE2	1
266	43166006	REMOTE CONTROLLER, WH-H1JE2	1
268	431S8206	OWNER'S MANUAL, MMY-MAP0804HT8-TR	1

E-Parts

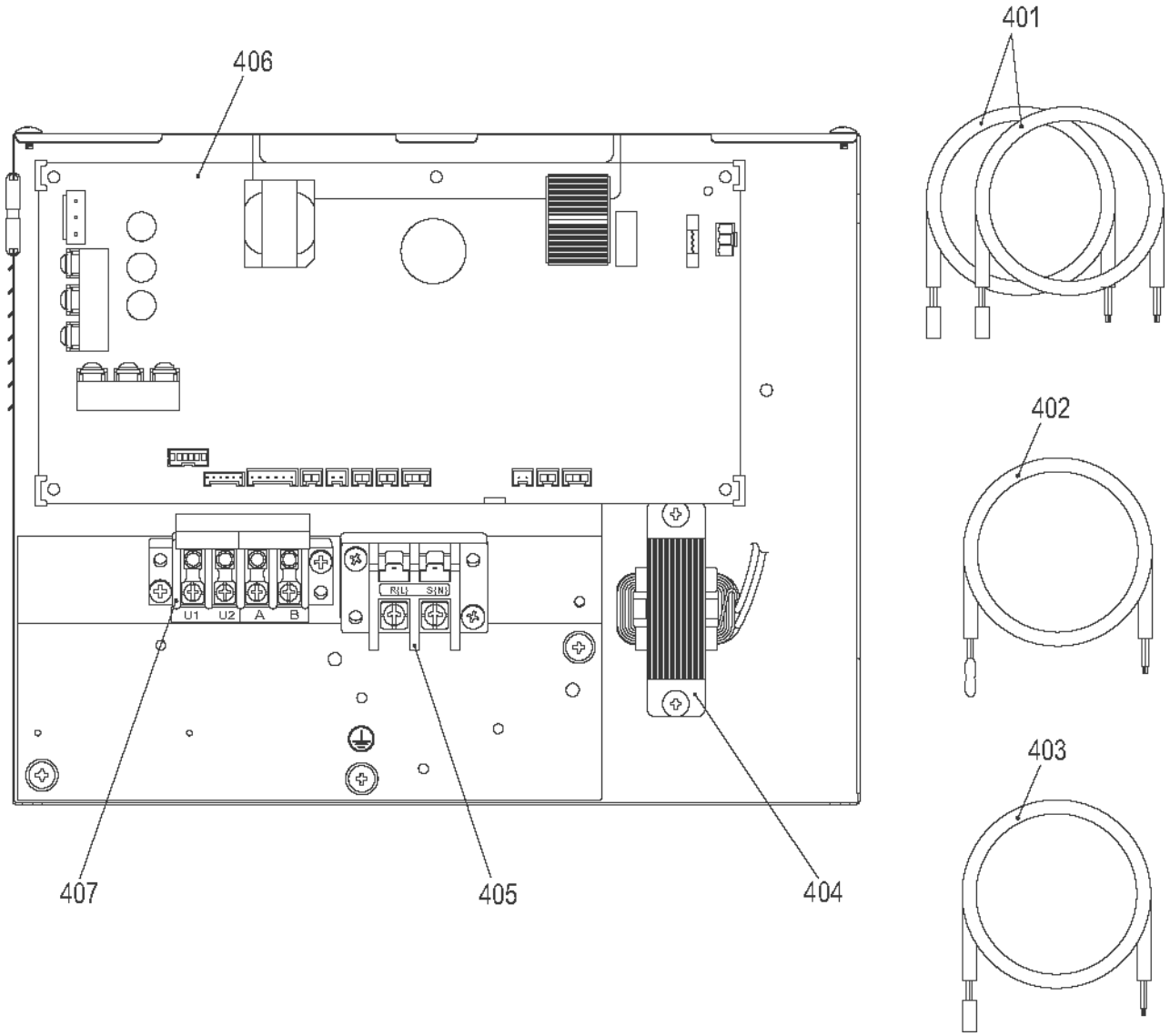

Location No.	Part No.	Description	MMD-				
			AP0074BH-E(TR)	AP0094BH-E(TR)	AP0124BH-E(TR)	AP0154BH-E(TR)	AP0184BH-E(TR)
401	43050425	SENSOR ASSY, SERVICE, TC	2	2	2	2	2
402	43050426	SENSOR, SERVICE, TA	1	1	1	1	1
403	43150320	SENSOR ASSY, SERVICE, TG	1	1	1	1	1
404	43158193	REACTOR, CH-43-2Z-T	1	1	1	1	1
405	43160575	TERMINAL BLOCK, 2P, 20A	1	1	1	1	1
406	4316V438	P.C. BOARD ASSY, MCC-1402	1	1	1	1	1
407	43160582	TERMINAL, 4P	1	1	1	1	1

Location No.	Part No.	Description	MMD-				
			AP0244BH-E(TR)	AP0274BH-E(TR)	AP0304BH-E(TR)	AP0364BH-E(TR)	AP0484BH-E(TR)
401	43050425	SENSOR ASSY, SERVICE, TC	2	2	2	2	2
402	43050426	SENSOR, SERVICE, TA	1	1	1	1	1
403	43150320	SENSOR ASSY, SERVICE, TG	1	1	1	1	1
404	43158193	REACTOR, CH-43-2Z-T	1	1	1	1	1
405	43160575	TERMINAL BLOCK, 2P, 20A	1	1	1	1	1
406	4316V438	P.C. BOARD ASSY, MCC-1402	1	1	1	1	1
407	43160582	TERMINAL, 4P	1	1	1	1	1

Location No.	Part No.	Description	MMD-
			AP0564BH-E(TR)
401	43050425	SENSOR ASSY, SERVICE, TC	2
402	43050426	SENSOR, SERVICE, TA	1
403	43150320	SENSOR ASSY, SERVICE, TG	1
404	43158193	REACTOR, CH-43-2Z-T	1
405	43160575	TERMINAL BLOCK, 2P, 20A	1
406	4316V438	P.C. BOARD ASSY, MCC-1402	1
407	43160582	TERMINAL, 4P	1

9-6. Concealed duct high static pressure type

MMD-AP0184H*, AP0244H*, AP0274H*, AP0364H*, AP0484H*

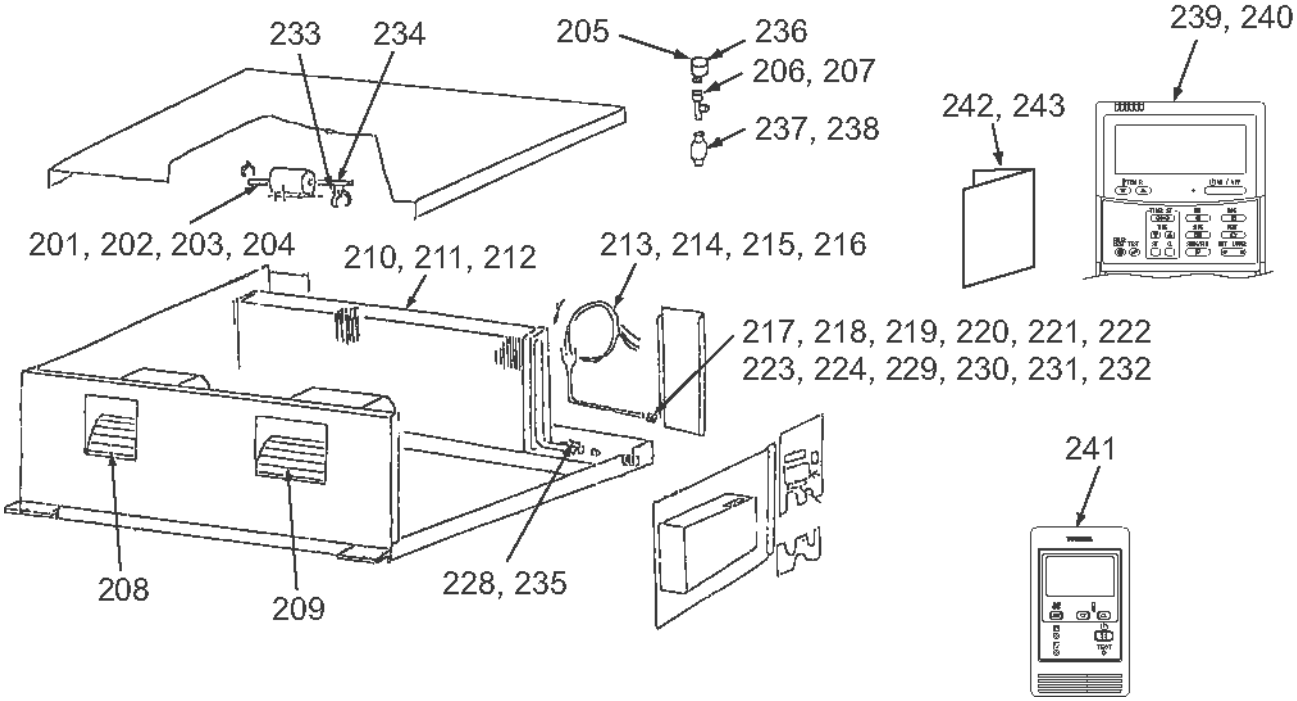

Location No.	Part No.	Description	MMD-				
			AP0184H-E	AP0244H-E	AP0274H-E	AP0364H-E	AP0484H-E
201	4312C014	MOTOR, FAN		1	1		
202	4312C015	MOTOR, FAN	1				
203	4312C016	MOTOR, FAN					1
204	4312C017	MOTOR, FAN				1	
205	43146707	MOTOR, PMV	1	1	1	1	1
206	43146723	BODY, PMV				1	1
207	43146714	VALVE, PMV	1	1	1		
208	43020352	FAN	1	1	1	1	1
209	43020353	FAN				1	1
210	4314J416	EVAPORATOR ASSY	1				
211	4314J417	EVAPORATOR ASSY		1	1	1	
212	4314J418	EVAPORATOR ASSY					1
213	43147658	DISTRIBUTOR ASSY	1				
214	43147659	DISTRIBUTOR ASSY		1	1		
215	43147660	DISTRIBUTOR ASSY				1	
216	43147661	DISTRIBUTOR ASSY					1
217	43047685	NUT, FLARE, 1/4 IN	1				
218	43149355	NUT, FLARE, 3/8, IN		1	1	1	1
219	43049776	SOCKET		1	1	1	1
220	43149351	SOCKET	1				
221	43047688	NUT, FLARE, 1/2, IN	1				
222	43149352	NUT, FLARE, 5/8, IN		1	1	1	1
223	43149353	SOCKET	1				
224	43149354	SOCKET		1	1	1	1
228	43107215	HOLDER, SENSOR	1	1	1	1	1
229	43047609	BONNET		1	1	1	1
230	43147195	BONNET, 1/2 IN	1				
231	43194029	BONNET		1	1	1	1
232	43049697	BONNET	1				
233	43139154	BAND, MOTOR, LEFT	2	2	2	2	2
234	43139155	BAND, MOTOR, RIGHT	2	2	2	2	2
235	43019904	HOLDER, SENSOR (TS)	2	2	2	2	2
236	43149314	SHEET, PMV	1	1	1		
237	43147664	STRAINER				1	1
238	4314Q043	STRAINER	1	1	1		
239	43166011	REMOTE CONTROLLER, SX-A4EE	1	1	1	1	1
240	43166012	REMOTE CONTROLLER, SX-A5EE	1	1	1	1	1
241	43166004	REMOTE CONTROLLER, SX-A11JE2	1	1	1	1	1
242	431S8205	OWNER'S MANUAL, MMY-MAP0804HT8-E	1	1	1	1	1

Location No.	Part No.	Description	MMD-				
			AP0184H-TR	AP0244H-TR	AP0274H-TR	AP0364H-TR	AP0484H-TR
201	4312C014	MOTOR, FAN		1	1		
202	4312C015	MOTOR, FAN	1				
203	4312C016	MOTOR, FAN					1
204	4312C017	MOTOR, FAN				1	
205	43146707	MOTOR, PMV	1	1	1	1	1
206	43146723	BODY, PMV				1	1
207	43146714	VALVE, PMV	1	1	1		
208	43020352	FAN	1	1	1	1	1
209	43020353	FAN				1	1
210	4314J416	EVAPORATOR ASSY	1				
211	4314J417	EVAPORATOR ASSY		1	1	1	
212	4314J418	EVAPORATOR ASSY					1
213	43147658	DISTRIBUTOR ASSY	1				
214	43147659	DISTRIBUTOR ASSY		1	1		
215	43147660	DISTRIBUTOR ASSY				1	
216	43147661	DISTRIBUTOR ASSY					1
217	43047685	NUT, FLARE, 1/4 IN	1				
218	43149355	NUT, FLARE, 3/8, IN		1	1	1	1
219	43049776	SOCKET		1	1	1	1
220	43149351	SOCKET	1				
221	43047688	NUT, FLARE, 1/2, IN	1				
222	43149352	NUT, FLARE, 5/8, IN		1	1	1	1
223	43149353	SOCKET	1				
224	43149354	SOCKET		1	1	1	1
228	43107215	HOLDER, SENSOR	1	1	1	1	1
229	43047609	BONNET		1	1	1	1
230	43147195	BONNET, 1/2 IN	1				
231	43194029	BONNET		1	1	1	1
232	43049697	BONNET	1				
233	43139154	BAND, MOTOR, LEFT	2	2	2	2	2
234	43139155	BAND, MOTOR, RIGHT	2	2	2	2	2
235	43019904	HOLDER, SENSOR (TS)	2	2	2	2	2
236	43149314	SHEET, PMV	1	1	1		
237	43147664	STRAINER				1	1
238	4314Q043	STRAINER	1	1	1		
239	43166011	REMOTE CONTROLLER, SX-A4EE	1	1	1	1	1
240	43166012	REMOTE CONTROLLER, SX-A5EE	1	1	1	1	1
241	43166004	REMOTE CONTROLLER, SX-A11JE2	1	1	1	1	1
243	431S8206	OWNER'S MANUAL, MMY-MAP0804HT8-TR	1	1	1	1	1

E-Parts

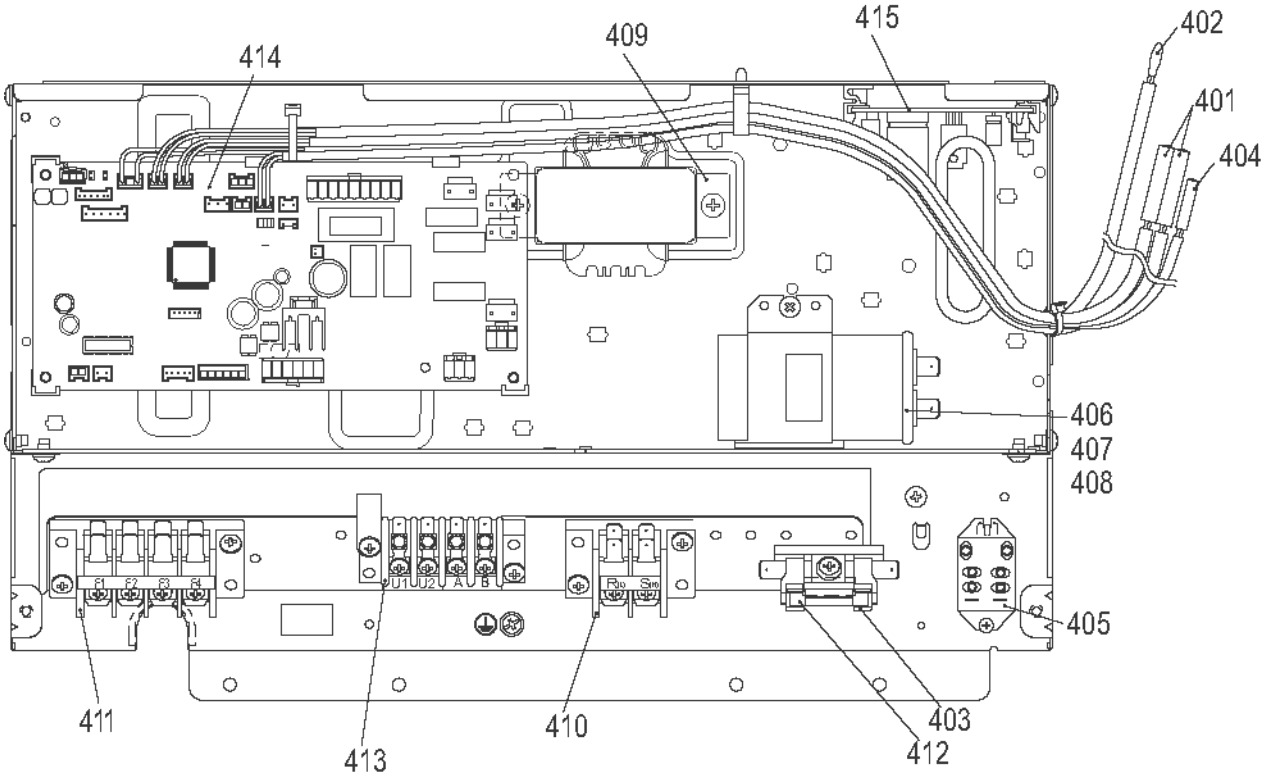

Location No.	Part No.	Description	MMD-				
			AP0184H-E(TR)	AP0244H-E(TR)	AP0274H-E(TR)	AP0364H-E(TR)	AP0484H-E(TR)
401	43050425	SENSOR ASSY, SERVICE	2	2	2	2	2
402	43050426	SENSOR, SERVICE	1	1	1	1	1
403	43060859	FUSE BLOCK, 30A, 250V	1	1	1	1	1
404	43150320	SENSOR ASSY, SERVICE	1	1	1	1	1
405	43154173	RELAY, LY2F-L, AC230V	1	1	1	1	1
406	43155206	CAPACITOR		1	1	1	1
407	43155208	CAPACITOR	1				
409	43158204	TRANSFORMER	1	1	1	1	1
410	43160575	TERMINAL BLOCK, 2P, 20A	1	1	1	1	1
411	43160576	TERMINAL BLOCK, 4P, 20A	1	1	1	1	1
412	43160577	FUSE, 10A	1	1	1	1	1
413	43160582	TERMINAL, 4P	1	1	1	1	1
414	4316V444	P.C. BOARD ASSY, MCC-1403	1	1	1	1	1
415	4316V345	P.C. BOARD ASSY, MCC-1520	1	1	1	1	1

MMD-AP0724H*, AP0964H*

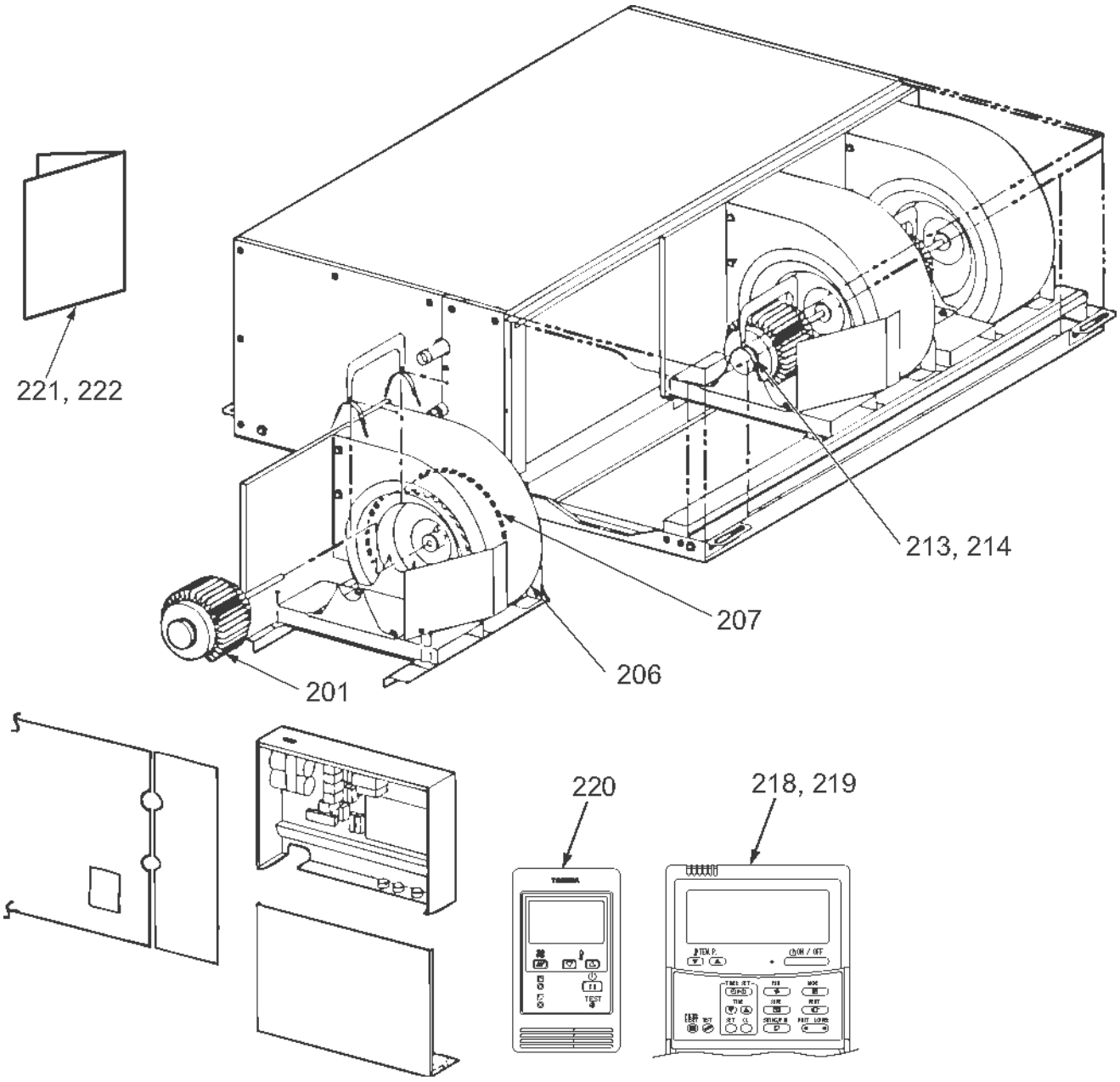

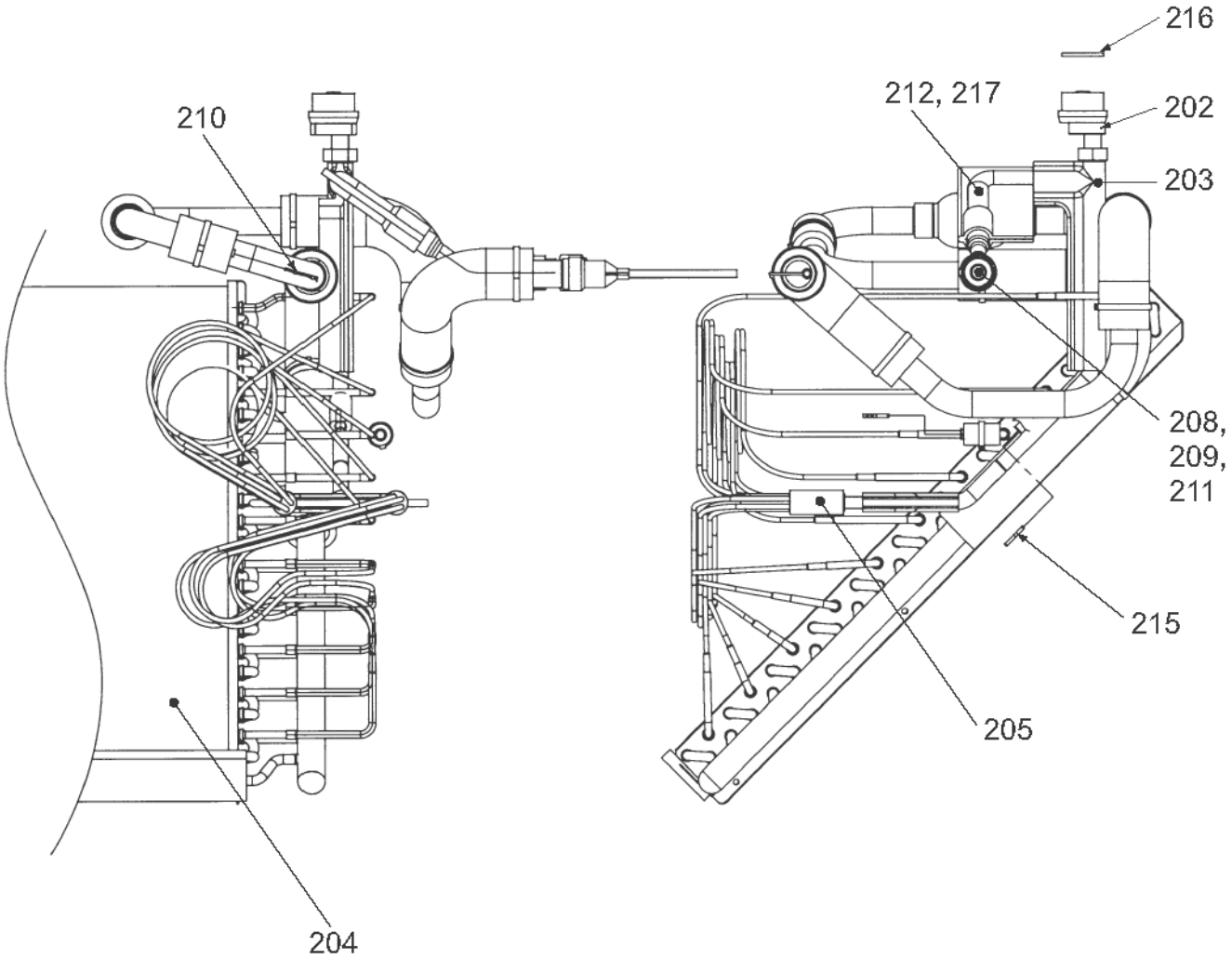
216
212, 217
202
210
203
208,
209,
211
215
205
204

Location No.	Part No.	Description	MMD-AP0724H-E	MMD-AP0964H-E
201	4312C023	MOTOR, FAN	3	3
202	43146707	MOTOR, PMV	1	1
203	43146729	BODY, PMV	1	1
204	4314J340	EVAPORATOR ASSY	1	1
205	4314Q091	DISTRIBUTOR ASSY	1	1
206	43122106	CASE, FAN	3	3
207	43120237	FAN	3	3
208	43047688	NUT, FLARE, 1/2, IN	1	1
209	43149332	SOCKET	1	1
210	43107215	HOLDER, SENSOR	1	1
211	43147195	BONNET, 1/2 IN	1	1
212	43147649	STRAINER	1	1
213	43139154	BAND, MOTOR, LEFT	6	6
214	43139155	BAND, MOTOR, RIGHT	6	6
215	43019904	HOLDER, SENSOR (TS)	2	2
216	43149314	SHEET, PMV	1	1
217	43147726	STRAINER	1	1
218	43166011	REMOTE CONTROLLER, SX-A4EE	1	1
219	43166012	REMOTE CONTROLLER, SX-A5EE	1	1
220	43166004	REMOTE CONTROLLER, SX-A11JE2	1	1
221	431S8205	OWNER'S MANUAL, MMY-MAP0804HT8-E	1	1

Location No.	Part No.	Description	MMD-AP0724H-TR	MMD-AP0964H-TR
201	4312C023	MOTOR, FAN	3	3
202	43146707	MOTOR, PMV	1	1
203	43146729	BODY, PMV	1	1
204	4314J340	EVAPORATOR ASSY	1	1
205	4314Q091	DISTRIBUTOR ASSY	1	1
206	43122106	CASE, FAN	3	3
207	43120237	FAN	3	3
208	43047688	NUT, FLARE, 1/2, IN	1	1
209	43149332	SOCKET	1	1
210	43107215	HOLDER, SENSOR	1	1
211	43147195	BONNET, 1/2 IN	1	1
212	43147649	STRAINER	1	1
213	43139154	BAND, MOTOR, LEFT	6	6
214	43139155	BAND, MOTOR, RIGHT	6	6
215	43019904	HOLDER, SENSOR (TS)	2	2
216	43149314	SHEET, PMV	1	1
217	43147726	STRAINER	1	1
218	43166011	REMOTE CONTROLLER, SX-A4EE	1	1
219	43166012	REMOTE CONTROLLER, SX-A5EE	1	1
220	43166004	REMOTE CONTROLLER, SX-A11JE2	1	1
222	431S8206	OWNER'S MANUAL, MMY-MAP0804HT8-TR	1	1

E-Parts

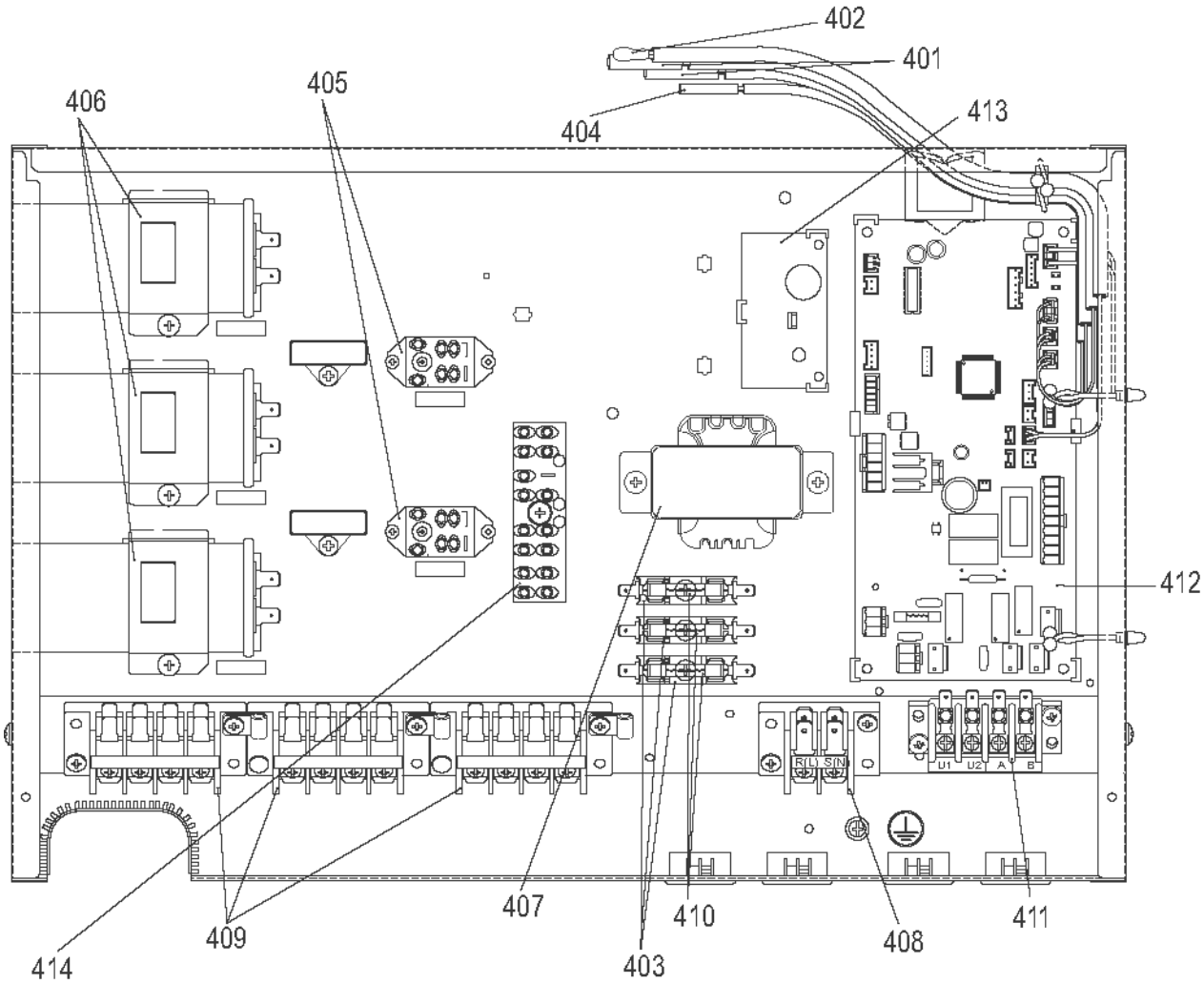

Location No.	Part No.	Description	MMD-AP0724H-E(TR)	MMD-AP0964H-E(TR)
401	43050425	SENSOR ASSY, SERVICE	2	2
402	43050426	SENSOR, SERVICE	1	1
403	43060859	FUSE BLOCK, 30A, 250V	3	3
404	43150320	SENSOR ASSY, SERVICE	1	1
405	43154173	RELAY, LY2F-L, AC230V	2	2
406	43155219	CAPACITOR	3	3
407	43158204	TRANSFORMER	1	1
408	43160575	TERMINAL BLOCK, 2P, 20A	1	1
409	43160576	TERMINAL BLOCK, 4P, 20A	3	3
410	43160577	FUSE, 10A	3	3
411	43160582	TERMINAL, 4P	1	1
412	4316V444	P.C. BOARD ASSY, MCC-1403	1	1
413	4316V345	P.C. BOARD ASSY, MCC-1520	1	1
414	43060157	TERMINAL BLOCK, 4P	1	1

9-7. Ceiling type

MMC-AP0154H*, AP0184H*, AP0244H*, AP0274H*

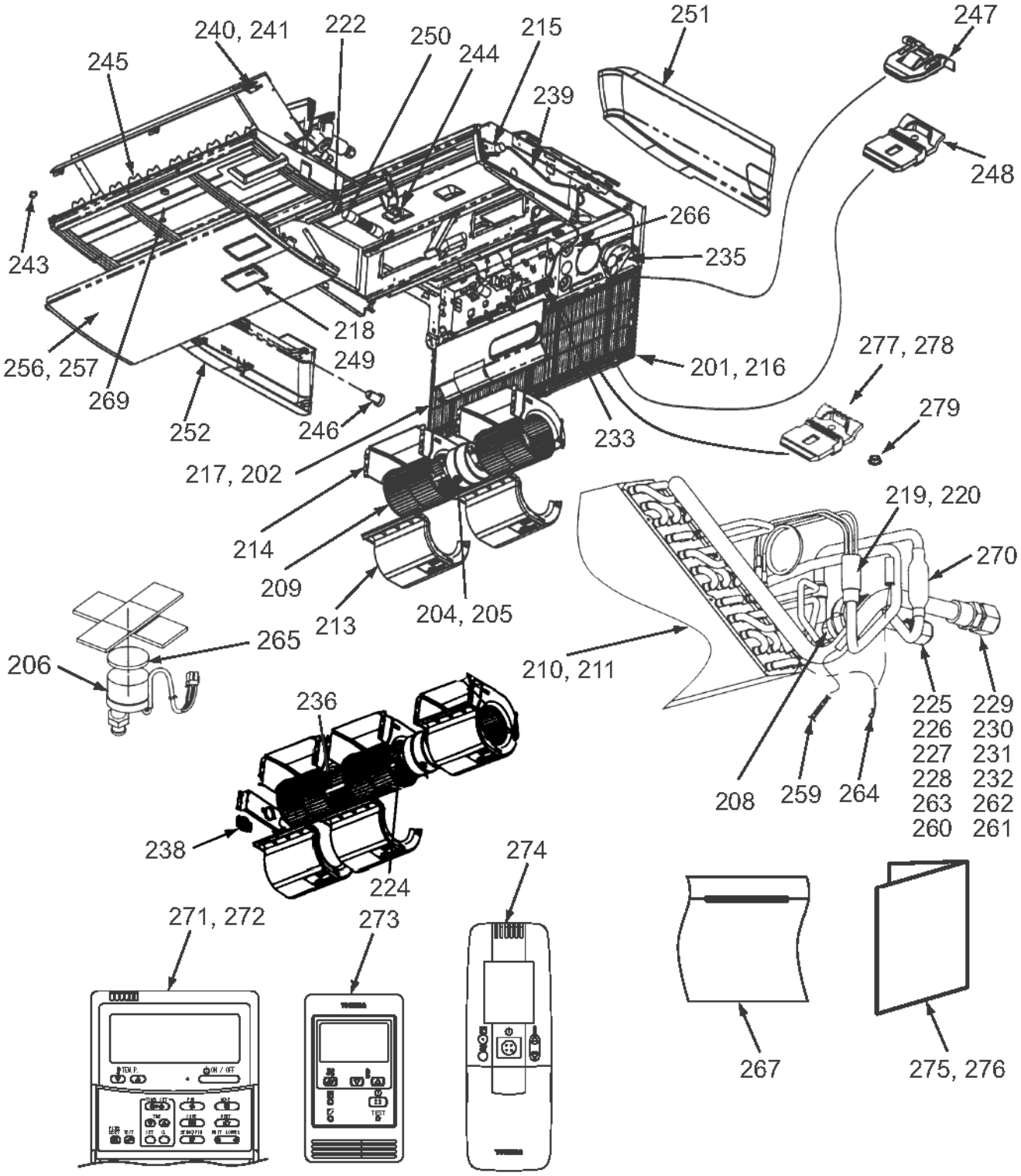

Location No.	Part No.	Description	MMC-			
			AP0154H-E	AP0184H-E	AP0244H-E	AP0274H-E
201	43109407	GRILLE, INLET	2	2		
202	43109408	GRILLE, INLET			2	2
204	43121742	MOTOR, FAN	1	1		
205	43121743	MOTOR, FAN			1	1
206	43146707	MOTOR, PMV	1	1	1	1
208	43146714	VALVE, PMV	1	1	1	1
209	43120227	FAN, MULTI BLADE	2	2	3	3
210	4314J426	EVAPORATOR ASSY	1	1		
211	4314J427	EVAPORATOR ASSY			1	1
213	43122084	CASE, FAN, LOWER	2	2	3	3
214	43122085	CASE, FAN, UPPER	2	2	3	3
215	43121746	DRIVER A'SSY HORIZONTAL LOUVER	1	1	1	1
216	43180314	AIR FILTER	2	2		
217	43180315	AIR FILTER			2	2
218	43108014	BASE, RECEIVER	1	1	1	1
219	4314Q079	DISTRIBUTOR ASSY	1	1		
220	4314Q080	DISTRIBUTOR ASSY			1	1
222	43179136	BAND, HOSE	2	2	2	2
224	43125162	COUPLING			1	1
225	43047685	NUT, FLARE, 1/4 IN	1	1		
226	43047686	NUT, FLARE, 3/8 IN			1	1
227	43049776	SOCKET			1	1
228	43149351	SOCKET	1	1		
229	43047688	NUT, FLARE, 1/2, IN	1	1		
230	43149352	NUT, FLARE, 5/8, IN			1	1
231	43149353	SOCKET	1	1		
232	43149354	SOCKET			1	1
233	43060029	FILTER,NOISE	4	4	4	4
235	43149326	COVER, BACK BASE	1	1	1	1
236	43125164	SHAFT			1	1
238	43125159	BEARING			1	1
239	43160556	LEAD, LOUVER HORIZONTAL	1	1	1	1
240	43109409	GRILLE A'SSY, HORIZONTAL	1	1		
241	43109410	GRILLE A'SSY, HORIZONTAL			1	1
243	43107252	SHAFT, HOLIZONTAL LOUVER	1	1	1	1
244	43107260	SUPPORT, GRILLE HORIZONTAL	1	1	1	1
245	43122086	GRILLE A'SSY, VERTICAL	2	2	2	2
246	43179129	CAP DRAIN	1	1	1	1
247	43107254	H1NGE, GRILLE INLET	4	4	4	4
248	43107255	HOOK, GRILLE INLET	2	2	2	2
249	43108016	MARK TOSHIBA	1	1	1	1
250	43170234	HOSE, DRAIN	1	1	1	1
251	43102647	COVER, SIDE (RIGHT)	1	1	1	1
252	43102648	COVER, SIDE (LEFT)	1	1	1	1
256	43191663	PANEL, UNDER	1	1		
257	43191664	PANEL, UNDER			1	1
259	43107215	HOLDER, SENSOR	1	1	1	1
260	43047609	BONNET			1	1
261	43147195	BONNET, 1/2 IN	1	1		
262	43194029	BONNET			1	1
263	43049697	BONNET	1	1		
264	43019904	HOLDER, SENSOR (TS)	2	2	2	2
265	43149314	SHEET, PMV	1	1	1	1
266	43162049	BUSHING 50DIA	1	1	1	1
267	43162050	BUSHING 56DIA	1	1	1	1
269	43197189	SCREW, FIX DRAIN PAN	1	1	1	1
270	43147664	STRAINER	1	1	1	1
271	43166011	REMOTE CONTROLLER, SX-A4EE	1	1	1	1
272	43166012	REMOTE CONTROLLER, SX-A5EE	1	1	1	1
273	43166004	REMOTE CONTROLLER, SX-A11JE2	1	1	1	1
274	43166006	REMOTE CONTROLLER, WH-H1JE2	1	1	1	1
275	431S8205	OWNER'S MANUAL, MMY-MAP0804HT8-E	1	1	1	1
277	43107285	HOOK, GRILLE INLET	2	2	2	2
278	43197202	NUT, FLANGE	2	2	2	2
279	43197203	SCREW, PAINT, M3	2	2	2	2

Location No.	Part No.	Description	MMC-			
			AP0154H-TR	AP0184H-TR	AP0244H-TR	AP0274H-TR
201	43109407	GRILLE, INLET	2	2		
202	43109408	GRILLE, INLET			2	2
204	43121742	MOTOR, FAN	1	1		
205	43121743	MOTOR, FAN			1	1
206	43146707	MOTOR, PMV	1	1	1	1
208	43146714	VALVE, PMV	1	1	1	1
209	43120227	FAN, MULTI BLADE	2	2	3	3
210	4314J426	EVAPORATOR ASSY	1	1		
211	4314J427	EVAPORATOR ASSY			1	1
213	43122084	CASE, FAN, LOWER	2	2	3	3
214	43122085	CASE, FAN, UPPER	2	2	3	3
215	43121746	DRIVER A'SSY HORIZONTAL LOUVER	1	1	1	1
216	43180314	AIR FILTER	2	2		
217	43180315	AIR FILTER			2	2
218	43108014	BASE, RECEIVER	1	1	1	1
219	4314Q079	DISTRIBUTOR ASSY	1	1		
220	4314Q080	DISTRIBUTOR ASSY			1	1
222	43179136	BAND, HOSE	2	2	2	2
224	43125162	COUPLING			1	1
225	43047685	NUT, FLARE, 1/4 IN	1	1		
226	43047686	NUT, FLARE, 3/8 IN			1	1
227	43049776	SOCKET			1	1
228	43149351	SOCKET	1	1		
229	43047688	NUT, FLARE, 1/2, IN	1	1		
230	43149352	NUT, FLARE, 5/8, IN			1	1
231	43149353	SOCKET	1	1		
232	43149354	SOCKET			1	1
233	43060029	FILTER,NOISE	4	4	4	4
235	43149326	COVER, BACK BASE	1	1	1	1
236	43125164	SHAFT			1	1
238	43125159	BEARING			1	1
239	43160556	LEAD, LOUVER HORIZONTAL	1	1	1	1
240	43109409	GRILLE A'SSY, HORIZONTAL	1	1		
241	43109410	GRILLE A'SSY, HORIZONTAL			1	1
243	43107252	SHAFT, HOLIZONTAL LOUVER	1	1	1	1
244	43107260	SUPPORT, GRILLE HORIZONTAL	1	1	1	1
245	43122086	GRILLE A'SSY, VERTICAL	2	2	2	2
246	43179129	CAP DRAIN	1	1	1	1
247	43107254	H1NGE, GRILLE INLET	4	4	4	4
248	43107255	HOOK, GRILLE INLET	2	2	2	2
249	43108016	MARK TOSHIBA	1	1	1	1
250	43170234	HOSE, DRAIN	1	1	1	1
251	43102647	COVER, SIDE (RIGHT)	1	1	1	1
252	43102648	COVER, SIDE (LEFT)	1	1	1	1
256	43191663	PANEL, UNDER	1	1		
257	43191664	PANEL, UNDER			1	1
259	43107215	HOLDER, SENSOR	1	1	1	1
260	43047609	BONNET			1	1
261	43147195	BONNET, 1/2 IN	1	1		
262	43194029	BONNET			1	1
263	43049697	BONNET	1	1		
264	43019904	HOLDER, SENSOR (TS)	2	2	2	2
265	43149314	SHEET, PMV	1	1	1	1
266	43162049	BUSHING 50DIA	1	1	1	1
267	43162050	BUSHING 56DIA	1	1	1	1
269	43197189	SCREW, FIX DRAIN PAN	1	1	1	1
270	43147664	STRAINER	1	1	1	1
271	43166011	REMOTE CONTROLLER, SX-A4EE	1	1	1	1
272	43166012	REMOTE CONTROLLER, SX-A5EE	1	1	1	1
273	43166004	REMOTE CONTROLLER, SX-A11JE2	1	1	1	1
274	43166006	REMOTE CONTROLLER, WH-H1JE2	1	1	1	1
276	431S8205	OWNER'S MANUAL, MMY-MAP0804HT8-TR	1	1	1	1
277	43107285	HOOK, GRILLE INLET	2	2	2	2
278	43197202	NUT, FLANGE	2	2	2	2
279	43197203	SCREW, PAINT, M3	2	2	2	2

MMC-AP0364H*, AP0484H*

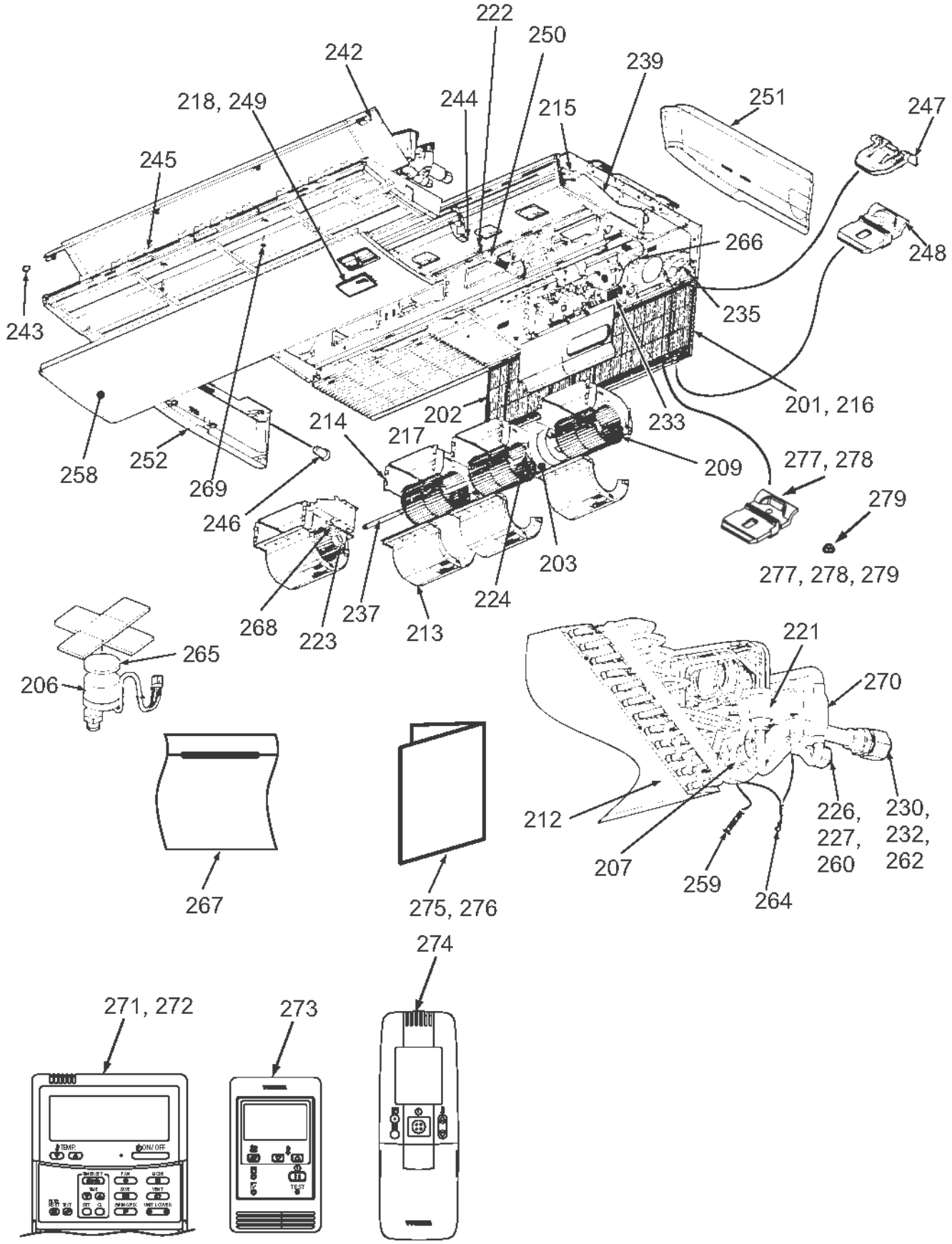

Location No.	Part No.	Description	MMC-AP0364H-E	MMC-AP0484H-E
201	43109407	GRILLE, INLET	1	1
202	43109408	GRILLE, INLET	2	2
203	43121741	MOTOR, FAN	1	1
206	43146707	MOTOR, PMV	1	1
207	43146723	BODY, PMV	1	1
209	43120227	FAN, MULTI BLADE	4	4
212	4314J428	EVAPORATOR ASSY	1	1
213	43122084	CASE, FAN, LOWER	4	4
214	43122085	CASE, FAN, UPPER	4	4
215	43121746	DRIVER A'SSY HORIZONTAL LOUVER	1	1
216	43180314	AIR FILTER	1	1
217	43180315	AIR FILTER	2	2
218	43108014	BASE, RECEIVER	1	1
221	4314Q081	DISTRIBUTOR ASSY	1	1
222	43179136	BAND, HOSE	2	2
223	43125131	BEARING, SHAFT	1	1
224	43125162	COUPLING	1	1
226	43047686	NUT, FLARE, 3/8 IN	1	1
227	43049776	SOCKET	1	1
230	43149352	NUT, FLARE, 5/8, IN	1	1
232	43149354	SOCKET	1	1
233	43060029	FILTER,NOISE	4	4
235	43149326	COVER, BACK BASE	1	1
237	43125165	SHAFT	1	1
239	43160556	LEAD, LOUVER HORIZONTAL	1	1
242	43109411	GRILLE A'SSY, HORIZONTAL	1	1
243	43107252	SHAFT, HOLIZONTAL LOUVER	1	1
244	43107260	SUPPORT, GRILLE HORIZONTAL	2	2
245	43122086	GRILLE A'SSY, VERTICAL	3	3
246	43179129	CAP DRAIN	1	1
247	43107254	HINGE, GRILLE INLET	6	6
248	43107255	HOOK, GRILLE INLET	3	3
249	43108016	MARK TOSHIBA	1	1
250	43170234	HOSE, DRAIN	1	1
251	43102647	COVER, SIDE (RIGHT)	1	1
252	43102648	COVER, SIDE (LEFT)	1	1
258	43191665	PANEL, UNDER	1	1
259	43107215	HOLDER, SENSOR	1	1
260	43047609	BONNET	1	1
262	43194029	BONNET	1	1
264	43019904	HOLDER, SENSOR (TS)	2	2
265	43149314	SHEET, PMV	1	1
266	43162049	BUSHING 50DIA	1	1
267	43162050	BUSHING 56DIA	1	1
268	43139153	SPACER, BEARING	2	2
269	43197189	SCREW, FIX DRAIN PAN	2	2
270	43147664	STRAINER	1	1
271	43166011	REMOTE CONTROLLER, SX-A4EE	1	1
272	43166012	REMOTE CONTROLLER, SX-A5EE	1	1
273	43166004	REMOTE CONTROLLER, SX-A11JE2	1	1
274	43166006	REMOTE CONTROLLER, WH-H1JE2	1	1
275	431S8205	OWNER'S MANUAL, MMY-MAP0804HT8-E	1	1
277	43107285	HOOK, GRILLE INLET	3	3
278	43197202	NUT, FLANGE	3	3
279	43197203	SCREW, PAINT, M3	3	3

Location No.	Part No.	Description	MMC-AP0364H-TR	MMC-AP0484H-TR
201	43109407	GRILLE, INLET	1	1
202	43109408	GRILLE, INLET	2	2
203	43121741	MOTOR, FAN	1	1
206	43146707	MOTOR, PMV	1	1
207	43146723	BODY, PMV	1	1
209	43120227	FAN, MULTI BLADE	4	4
212	4314J428	EVAPORATOR ASSY	1	1
213	43122084	CASE, FAN, LOWER	4	4
214	43122085	CASE, FAN, UPPER	4	4
215	43121746	DRIVER A'SSY HORIZONTAL LOUVER	1	1
216	43180314	AIR FILTER	1	1
217	43180315	AIR FILTER	2	2
218	43108014	BASE, RECEIVER	1	1
221	4314Q081	DISTRIBUTOR ASSY	1	1
222	43179136	BAND, HOSE	2	2
223	43125131	BEARING, SHAFT	1	1
224	43125162	COUPLING	1	1
226	43047686	NUT, FLARE, 3/8 IN	1	1
227	43049776	SOCKET	1	1
230	43149352	NUT, FLARE, 5/8, IN	1	1
232	43149354	SOCKET	1	1
233	43060029	FILTER,NOISE	4	4
235	43149326	COVER, BACK BASE	1	1
237	43125165	SHAFT	1	1
239	43160556	LEAD, LOUVER HORIZONTAL	1	1
242	43109411	GRILLE A'SSY, HORIZONTAL	1	1
243	43107252	SHAFT, HOLIZONTAL LOUVER	1	1
244	43107260	SUPPORT, GRILLE HORIZONTAL	2	2
245	43122086	GRILLE A'SSY, VERTICAL	3	3
246	43179129	CAP DRAIN	1	1
247	43107254	HINGE, GRILLE INLET	6	6
248	43107255	HOOK, GRILLE INLET	3	3
249	43108016	MARK TOSHIBA	1	1
250	43170234	HOSE, DRAIN	1	1
251	43102647	COVER, SIDE (RIGHT)	1	1
252	43102648	COVER, SIDE (LEFT)	1	1
258	43191665	PANEL, UNDER	1	1
259	43107215	HOLDER, SENSOR	1	1
260	43047609	BONNET	1	1
262	43194029	BONNET	1	1
264	43019904	HOLDER, SENSOR (TS)	2	2
265	43149314	SHEET, PMV	1	1
266	43162049	BUSHING 50DIA	1	1
267	43162050	BUSHING 56DIA	1	1
268	43139153	SPACER, BEARING	2	2
269	43197189	SCREW, FIX DRAIN PAN	2	2
270	43147664	STRAINER	1	1
271	43166011	REMOTE CONTROLLER, SX-A4EE	1	1
272	43166012	REMOTE CONTROLLER, SX-A5EE	1	1
273	43166004	REMOTE CONTROLLER, SX-A11JE2	1	1
274	43166006	REMOTE CONTROLLER, WH-H1JE2	1	1
276	431S8206	OWNER'S MANUAL, MMY-MAP0804HT8-TR	1	1
277	43107285	HOOK, GRILLE INLET	3	3
278	43197202	NUT, FLANGE	3	3
279	43197203	SCREW, PAINT, M3	3	3

E-Parts

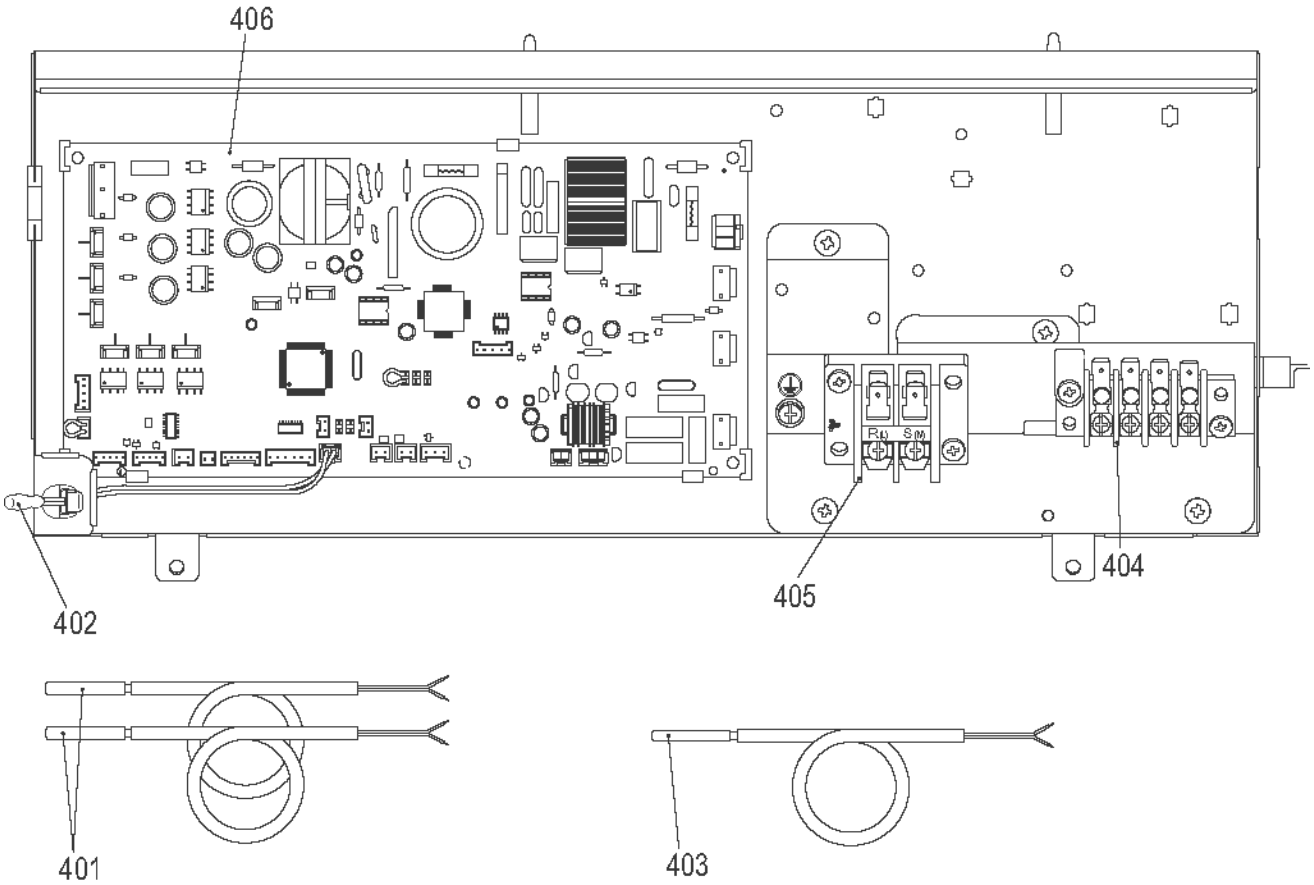

Location No.	Part No.	Description	MMC-			
			AP0154H-E(TR)	AP0184H-E(TR)	AP0244H-E(TR)	AP0274H-E(TR)
401	43050425	SENSOR ASSY, SERVICE, TC	2	2	2	2
402	43050426	SENSOR, SERVICE, TA	1	1	1	1
403	43150320	SENSOR ASSY, SERVICE, TG	1	1	1	1
404	43160582	TERMINAL, 4P	1	1	1	1
405	43160575	TERMINAL BLOCK, 2P, 20A	1	1	1	1
406	4316V437	P.C. BOARD ASSY, MCC-1402	1	1	1	1

Location No.	Part No.	Description	MMC-	
			AP0364H-E(TR)	AP0484H-E(TR)
401	43050425	SENSOR ASSY, SERVICE, TC	2	2
402	43050426	SENSOR, SERVICE, TA	1	1
403	43150320	SENSOR ASSY, SERVICE, TG	1	1
404	43160582	TERMINAL, 4P	1	1
405	43160575	TERMINAL BLOCK, 2P, 20A	1	1
406	4316V437	P.C. BOARD ASSY, MCC-1402	1	1

9-8. Floor standing type

MMF-AP0154H*, AP0184H*, AP0244H*, AP0274H*

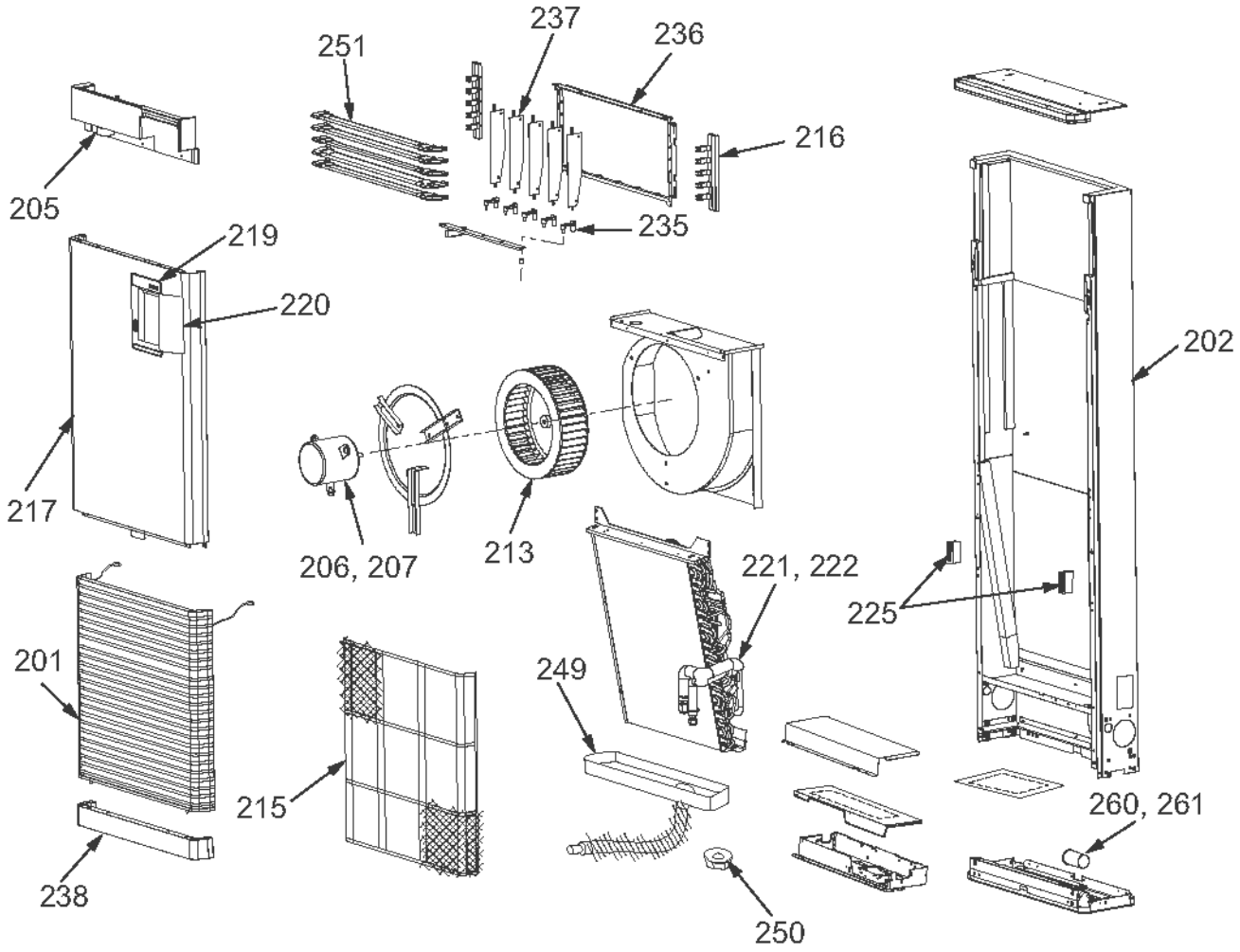

MMF-AP0154H*, AP0184H*, AP0244H*, AP0274H*

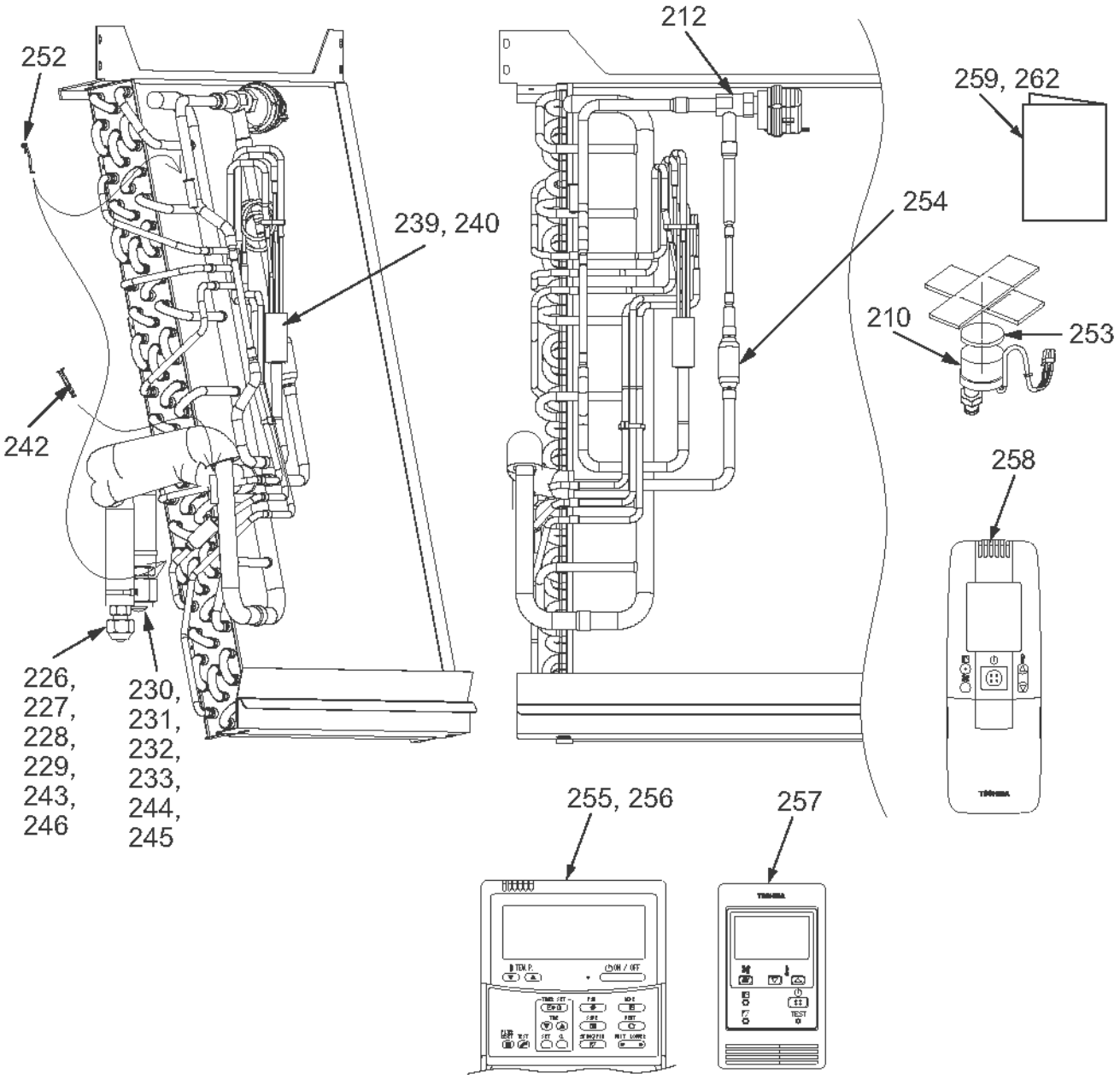

Location No.	Part No.	Description	MMF-			
			AP0154H-E	AP0184H-E	AP0244H-E	AP0274H-E
201	43109392	GRILLE, INLET	2	2	2	2
202	43100388	CASE ASSY	1	1	1	1
205	4312D004	MOTOR, GEARD	1	1	1	1
206	4312C010	MOTOR, FAN			1	1
207	4312C011	MOTOR, FAN	1	1		
210	43146707	MOTOR, PMV	1	1	1	1
212	43146726	BODY, PMV	1	1	1	1
213	43120229	FAN, MULTI BLADE	1	1	1	1
215	43180238	AIR FILTER	1	1	1	1
216	43139132	CLAMP, GRILLE	2	2	2	2
217	43100389	CABINET ASSY	1	1	1	1
219	43101357	PANEL, REMOTE CONTROLER	1	1	1	1
220	43101345	COVER, REMOTE CONTROLER	1	1	1	1
221	4314J410	EVAPORATOR ASSY	1	1		
222	4314J411	EVAPORATOR ASSY			1	1
225	4300Q077	MAGNET, LOCK	2	2	2	2
226	43047685	NUT, FLARE, 1/4 IN	1	1		
227	43149355	NUT, FLARE, 3/8, IN			1	1
228	43049776	SOCKET			1	1
229	43149351	SOCKET	1	1		
230	43047688	NUT, FLARE, 1/2, IN	1	1		
231	43149352	NUT, FLARE, 5/8, IN			1	1
232	43149353	SOCKET	1	1		
233	43149354	SOCKET			1	1
235	43139093	CONNECTION ROD	5	5	5	5
236	3759V024	GRILLE ASSY	1	1	1	1
237	43109207	GRILLE, OUTLET, VERTICAL	5	5	5	5
238	43100373	CABINET, LOWER	1	1	1	1
239	4314Q084	DISTRIBUTOR ASSY	1	1		
240	4314Q085	DISTRIBUTOR ASSY			1	1
242	43107215	HOLDER, SENSOR	1	1	1	1
243	43047609	BONNET			1	1
244	43147195	BONNET, 1/2 IN	1	1		
245	43194029	BONNET			1	1
246	43049697	BONNET	1	1		
249	43172090	PAN, DRAIN	1	1	1	1
250	43197136	WASHER	1	1	1	1
251	43109412	GRILLE, OUTLET, HORIZONTAL	5	5	5	5
252	43019904	HOLDER, SENSOR (TS)	2	2	2	2
253	43149314	SHEET, PMV	1	1	1	1
254	43147664	STRAINER	1	1	1	1
255	43166011	REMOTE CONTROLLER, SX-A4EE	1	1	1	1
256	43166012	REMOTE CONTROLLER, SX-A5EE	1	1	1	1
257	43166004	REMOTE CONTROLLER, SX-A11JE2	1	1	1	1
258	43166006	REMOTE CONTROLLER, WH-H1JE2	1	1	1	1
259	431S8205	OWNER'S MANUAL, MMY-MAP0804HT8-E	1	1	1	1
260	43155198	CAPACITOR	1	1		
261	43155199	CAPACITOR			1	1

Location No.	Part No.	Description	MMF-			
			AP0154H-TR	AP0184H-TR	AP0244H-TR	AP0274H-TR
201	43109392	GRILLE, INLET	2	2	2	2
202	43100388	CASE ASSY	1	1	1	1
205	4312D004	MOTOR, GEARD	1	1	1	1
206	4312C010	MOTOR, FAN			1	1
207	4312C011	MOTOR, FAN	1	1		
210	43146707	MOTOR, PMV	1	1	1	1
212	43146726	BODY, PMV	1	1	1	1
213	43120229	FAN, MULTI BLADE	1	1	1	1
215	43180238	AIR FILTER	1	1	1	1
216	43139132	CLAMP, GRILLE	2	2	2	2
217	43100389	CABINET ASSY	1	1	1	1
219	43101357	PANEL, REMOTE CONTROLER	1	1	1	1
220	43101345	COVER, REMOTE CONTROLER	1	1	1	1
221	4314J410	EVAPORATOR ASSY	1	1		
222	4314J411	EVAPORATOR ASSY			1	1
225	4300Q077	MAGNET, LOCK	2	2	2	2
226	43047685	NUT, FLARE, 1/4 IN	1	1		
227	43149355	NUT, FLARE, 3/8, IN			1	1
228	43049776	SOCKET			1	1
229	43149351	SOCKET	1	1		
230	43047688	NUT, FLARE, 1/2, IN	1	1		
231	43149352	NUT, FLARE, 5/8, IN			1	1
232	43149353	SOCKET	1	1		
233	43149354	SOCKET			1	1
235	43139093	CONNECTION ROD	5	5	5	5
236	3759V024	GRILLE ASSY	1	1	1	1
237	43109207	GRILLE, OUTLET, VERTICAL	5	5	5	5
238	43100373	CABINET, LOWER	1	1	1	1
239	4314Q084	DISTRIBUTOR ASSY	1	1		
240	4314Q085	DISTRIBUTOR ASSY			1	1
242	43107215	HOLDER, SENSOR	1	1	1	1
243	43047609	BONNET			1	1
244	43147195	BONNET, 1/2 IN	1	1		
245	43194029	BONNET			1	1
246	43049697	BONNET	1	1		
249	43172090	PAN, DRAIN	1	1	1	1
250	43197136	WASHER	1	1	1	1
251	43109412	GRILLE, OUTLET, HORIZONTAL	5	5	5	5
252	43019904	HOLDER, SENSOR (TS)	2	2	2	2
253	43149314	SHEET, PMV	1	1	1	1
254	43147664	STRAINER	1	1	1	1
255	43166011	REMOTE CONTROLLER, SX-A4EE	1	1	1	1
256	43166012	REMOTE CONTROLLER, SX-A5EE	1	1	1	1
257	43166004	REMOTE CONTROLLER, SX-A11JE2	1	1	1	1
258	43166006	REMOTE CONTROLLER, WH-H1JE2	1	1	1	1
260	43155198	CAPACITOR	1	1		
261	43155199	CAPACITOR			1	1
262	431S8206	OWNER'S MANUAL, MMY-MAP0804HT8-TR	1	1	1	1

MMF-AP0364H*, AP0484H*, AP0564H*

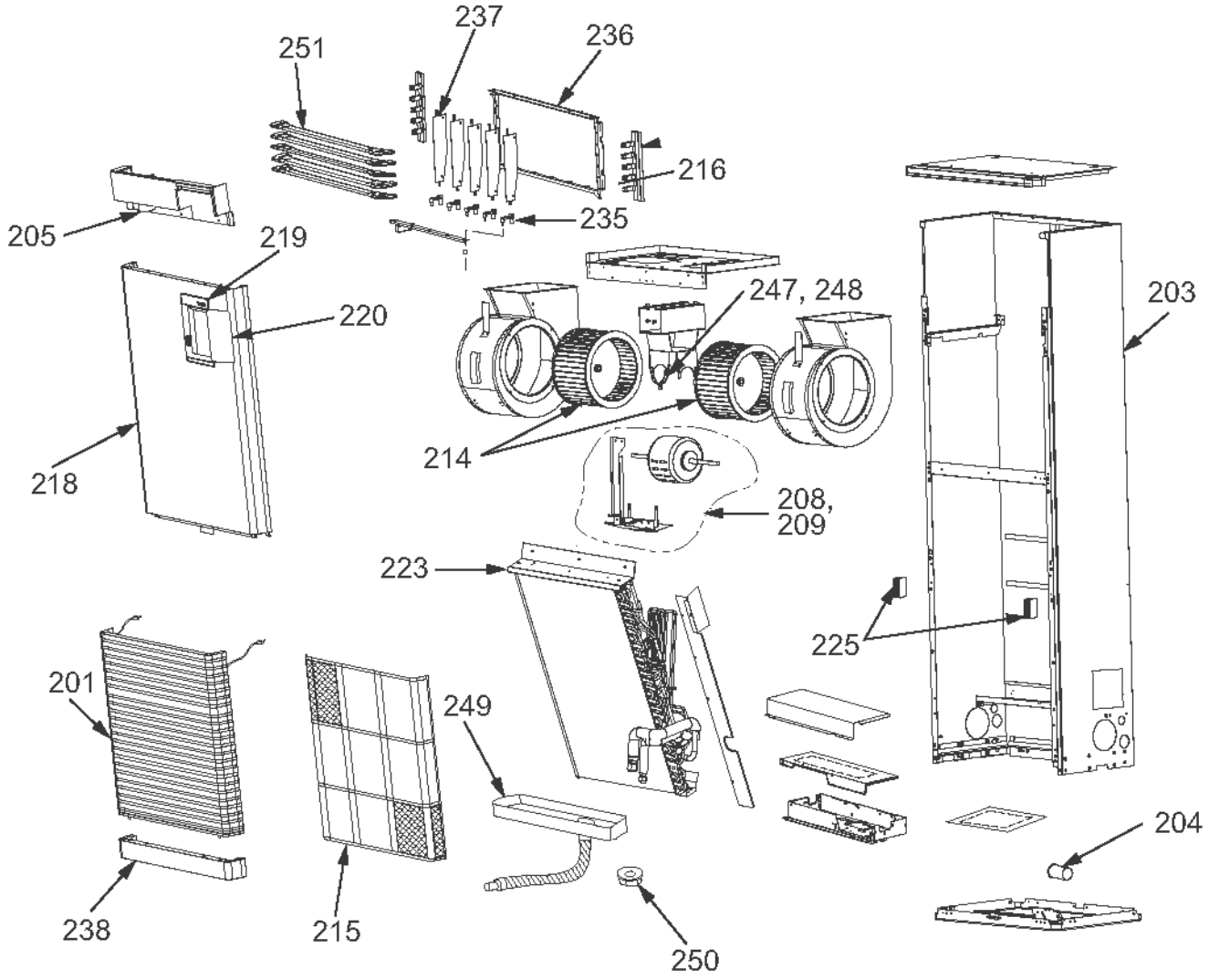

MMF-AP0364H*, AP0484H*, AP0564H*

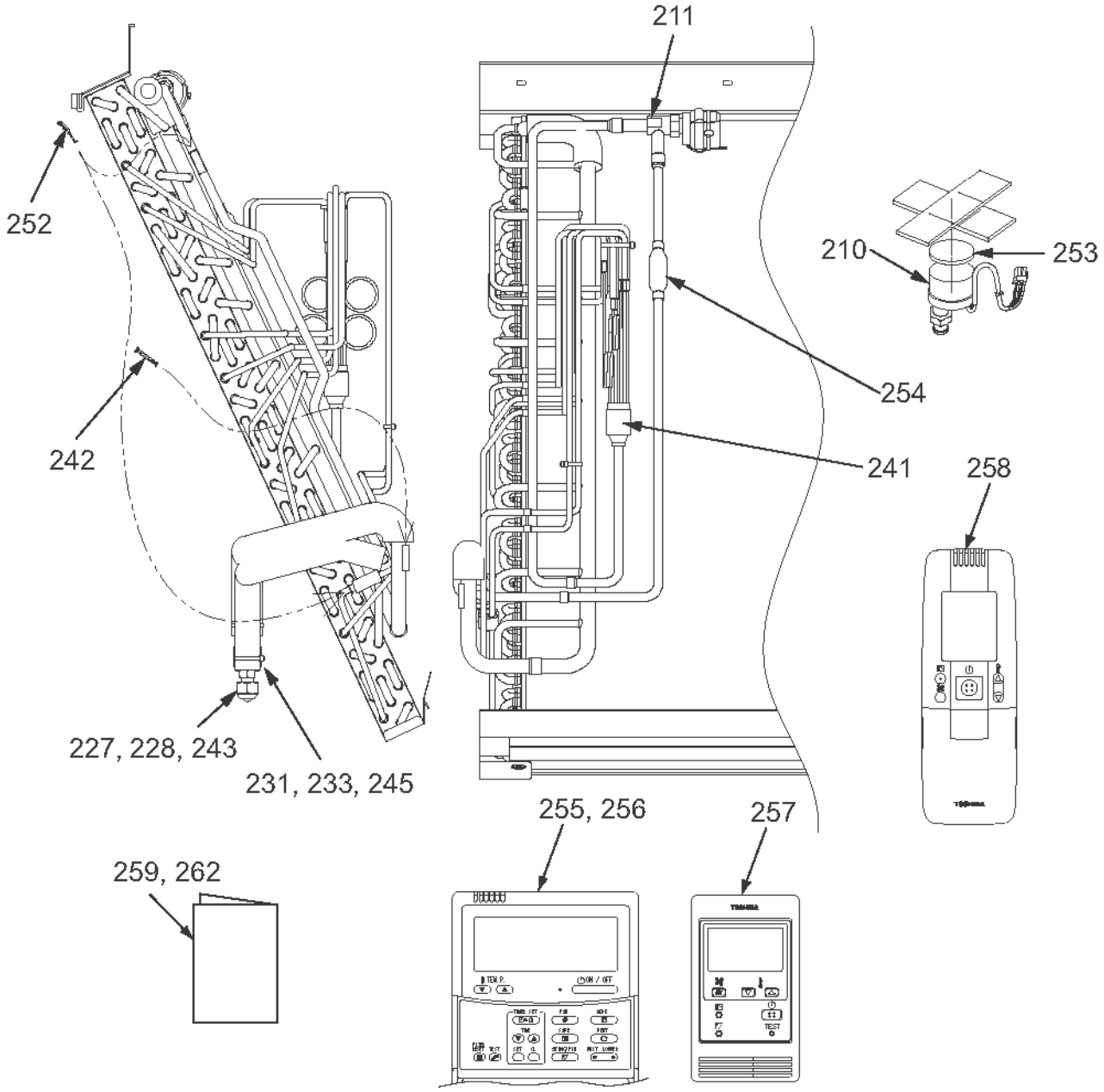

Location No.	Part No.	Description	MMF-		
			AP0364H-E	AP0484H-E	AP0564H-E
201	43109392	GRILLE, INLET	2	2	2
203	43102650	CASE ASSY	1	1	1
204	43155180	CAPACITOR	1	1	1
205	4312D004	MOTOR, GEARD	1	1	1
208	4312C012	MOTOR, FAN	1		
209	4312C013	MOTOR, FAN		1	1
210	43146707	MOTOR, PMV	1	1	1
211	43146723	BODY, PMV	1	1	1
214	43120230	FAN, MULTI BLADE	2	2	2
215	43180238	AIR FILTER	1	1	1
216	43139132	CLAMP, GRILLE	2	2	2
218	43100390	CABINET ASSY	1	1	1
219	43101357	PANEL, REMOTE CONTROLER	1	1	1
220	43101345	COVER, REMOTE CONTROLER	1	1	1
223	4314J412	EVAPORATOR ASSY	1	1	1
225	4300Q077	MAGNET, LOCK	2	2	2
227	43149355	NUT, FLARE, 3/8, IN	1	1	1
228	43049776	SOCKET	1	1	1
231	43149352	NUT, FLARE, 5/8, IN	1	1	1
233	43149354	SOCKET	1	1	1
235	43139093	CONNECTION ROD	5	5	5
236	3759V024	GRILLE ASSY	1	1	1
237	43109207	GRILLE, OUTLET, VERTICAL	5	5	5
238	43100373	CABINET, LOWER	1	1	1
241	4314Q086	DISTRIBUTOR ASSY	1	1	1
242	43107215	HOLDER, SENSOR	1	1	1
243	43047609	BONNET	1	1	1
245	43194029	BONNET	1	1	1
247	43139154	BAND, MOTOR, LEFT	2	2	2
248	43139155	BAND, MOTOR, RIGHT	2	2	2
249	43172090	PAN, DRAIN	1	1	1
250	43197136	WASHER	1	1	1
251	43109412	GRILLE, OUTLET, HORIZONTAL	5	5	5
252	43019904	HOLDER, SENSOR (TS)	2	2	2
253	43149314	SHEET, PMV	1	1	1
254	43147664	STRAINER	1	1	1
255	43166011	REMOTE CONTROLLER, SX-A4EE	1	1	1
256	43166012	REMOTE CONTROLLER, SX-A5EE	1	1	1
257	43166004	REMOTE CONTROLLER, SX-A11JE2	1	1	1
258	43166006	REMOTE CONTROLLER, WH-H1JE2	1	1	1
259	431S8205	OWNER'S MANUAL, MMY-MAP0804HT8-E	1	1	1

Location No.	Part No.	Description	MMF-		
			AP0364H-TR	AP0484H-TR	AP0564H-TR
201	43109392	GRILLE, INLET	2	2	2
203	43102650	CASE ASSY	1	1	1
204	43155180	CAPACITOR	1	1	1
205	4312D004	MOTOR, GEARD	1	1	1
208	4312C012	MOTOR, FAN	1		
209	4312C013	MOTOR, FAN		1	1
210	43146707	MOTOR, PMV	1	1	1
211	43146723	BODY, PMV	1	1	1
214	43120230	FAN, MULTI BLADE	2	2	2
215	43180238	AIR FILTER	1	1	1
216	43139132	CLAMP, GRILLE	2	2	2
218	43100390	CABINET ASSY	1	1	1
219	43101357	PANEL, REMOTE CONTROLER	1	1	1
220	43101345	COVER, REMOTE CONTROLER	1	1	1
223	4314J412	EVAPORATOR ASSY	1	1	1
225	4300Q077	MAGNET, LOCK	2	2	2
227	43149355	NUT, FLARE, 3/8, IN	1	1	1
228	43049776	SOCKET	1	1	1
231	43149352	NUT, FLARE, 5/8, IN	1	1	1
233	43149354	SOCKET	1	1	1
235	43139093	CONNECTION ROD	5	5	5
236	3759V024	GRILLE ASSY	1	1	1
237	43109207	GRILLE, OUTLET, VERTICAL	5	5	5
238	43100373	CABINET, LOWER	1	1	1
241	4314Q086	DISTRIBUTOR ASSY	1	1	1
242	43107215	HOLDER, SENSOR	1	1	1
243	43047609	BONNET	1	1	1
245	43194029	BONNET	1	1	1
247	43139154	BAND, MOTOR, LEFT	2	2	2
248	43139155	BAND, MOTOR, RIGHT	2	2	2
249	43172090	PAN, DRAIN	1	1	1
250	43197136	WASHER	1	1	1
251	43109412	GRILLE, OUTLET, HORIZONTAL	5	5	5
252	43019904	HOLDER, SENSOR (TS)	2	2	2
253	43149314	SHEET, PMV	1	1	1
254	43147664	STRAINER	1	1	1
255	43166011	REMOTE CONTROLLER, SX-A4EE	1	1	1
256	43166012	REMOTE CONTROLLER, SX-A5EE	1	1	1
257	43166004	REMOTE CONTROLLER, SX-A11JE2	1	1	1
258	43166006	REMOTE CONTROLLER, WH-H1JE2	1	1	1
262	431S8206	OWNER'S MANUAL, MMY-MAP0804HT8-TR	1	1	1

E-Parts

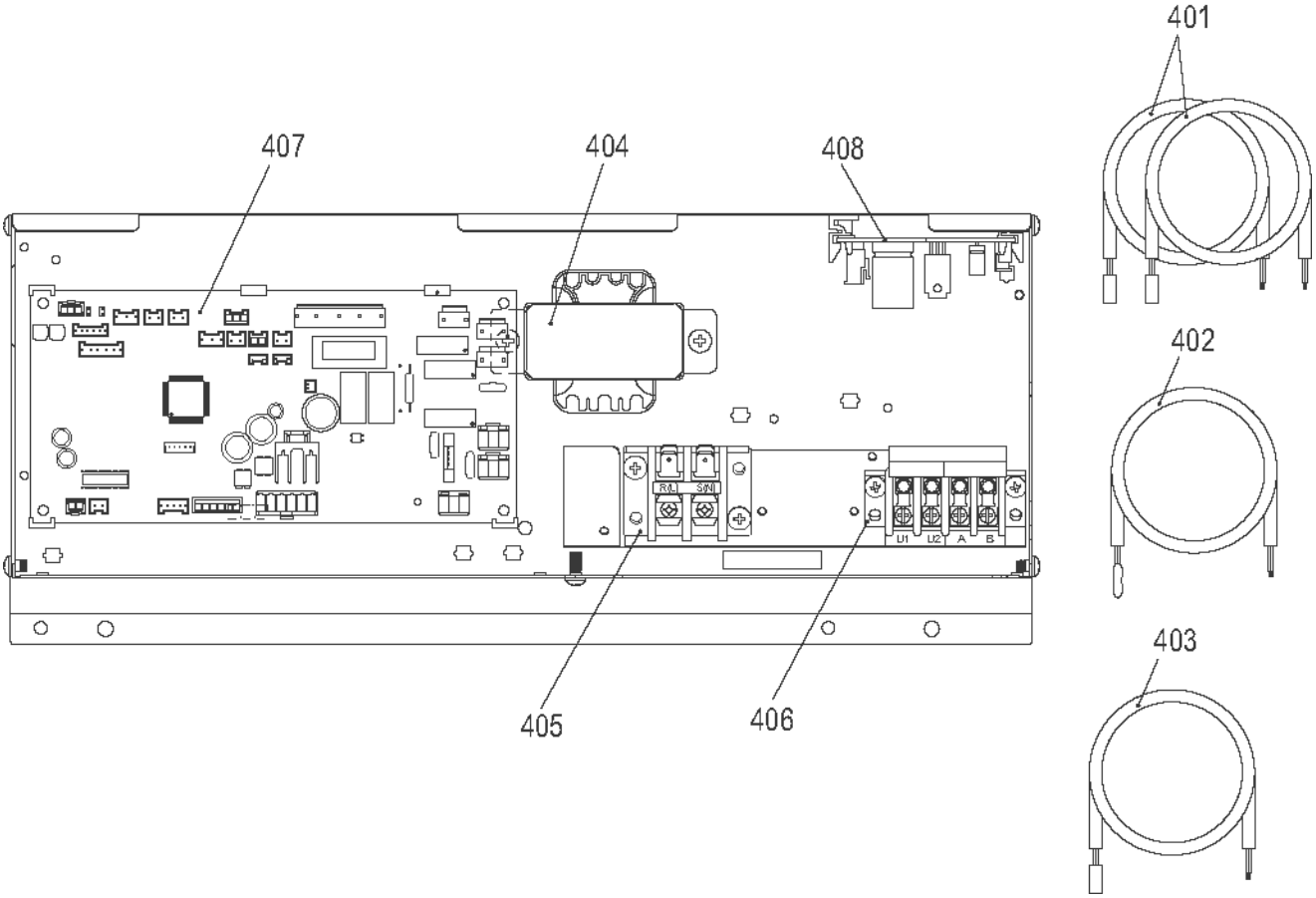

Location No.	Part No.	Description	MMF-			
			AP0154H-E(TR)	AP0184H-E(TR)	AP0244H-E(TR)	AP0274H-E(TR)
401	43050425	SENSOR ASSY, SERVICE	2	2	2	2
402	43050426	SENSOR, SERVICE	1	1	1	1
403	43150320	SENSOR ASSY, SERVICE	1	1	1	1
404	43158204	TRANSFORMER	1	1	1	1
405	43160575	TERMINAL BLOCK, 2P, 20A	1	1	1	1
406	43160582	TERMINAL, 4P	1	1	1	1
407	4316V444	P.C. BOARD ASSY, MCC-1403	1	1	1	1
408	4316V345	P.C. BOARD ASSY, MCC-1520	1	1	1	1

Location No.	Part No.	Description	MMF-		
			AP0364H-E(TR)	AP0484H-E(TR)	AP0564H-E(TR)
401	43050425	SENSOR ASSY, SERVICE	2	2	2
402	43050426	SENSOR, SERVICE	1	1	1
403	43150320	SENSOR ASSY, SERVICE	1	1	1
404	43158204	TRANSFORMER	1	1	1
405	43160575	TERMINAL BLOCK, 2P, 20A	1	1	1
406	43160582	TERMINAL, 4P	1	1	1
407	4316V444	P.C. BOARD ASSY, MCC-1403	1	1	1
408	4316V345	P.C. BOARD ASSY, MCC-1520	1	1	1

9-9. Floor standing concealed type

MML-AP0074BH*, AP0094BH*, AP0124BH*, AP0154BH*, AP0184BH*

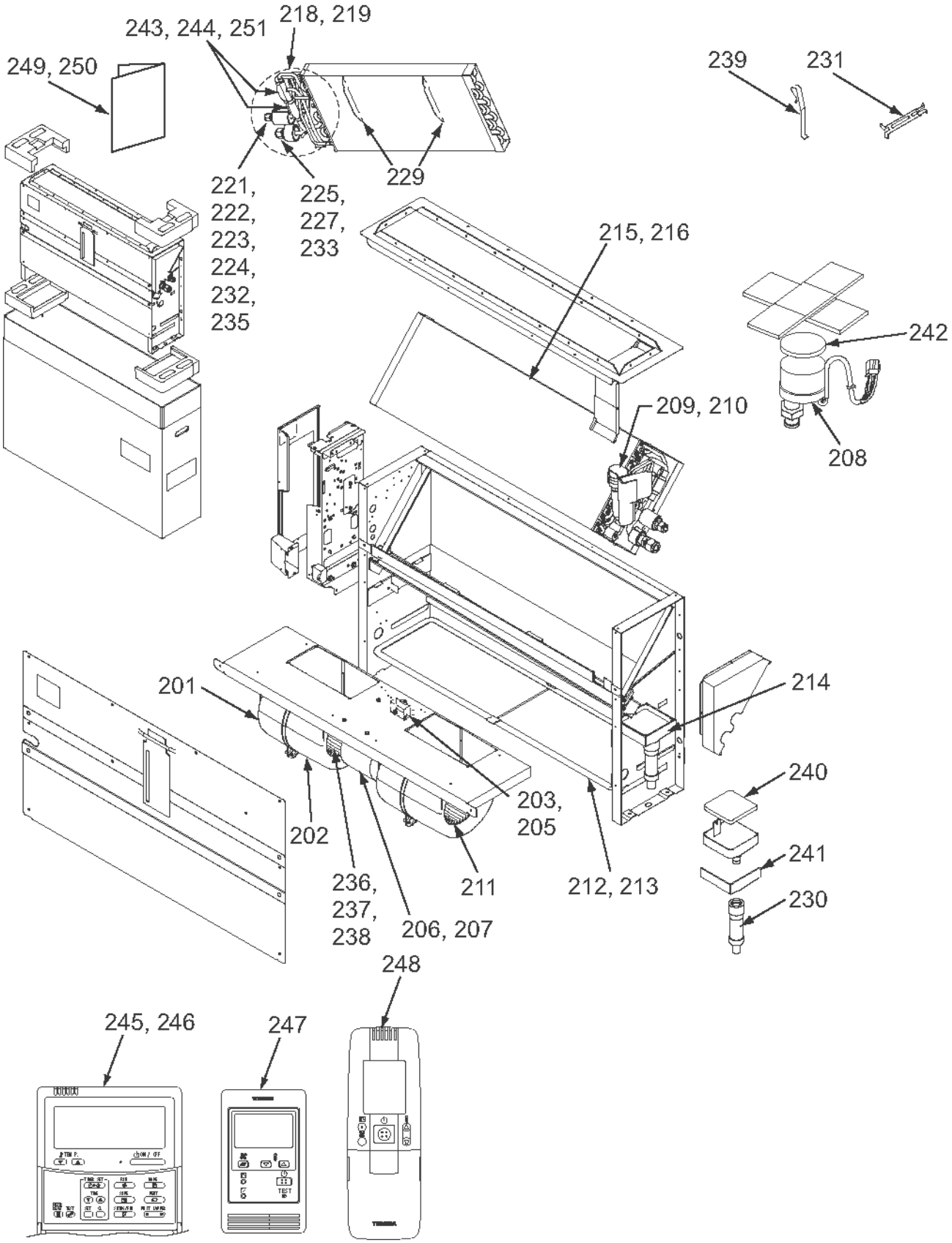

Location No.	Part No.	Description	MML-				
			AP0074BH-E	AP0094BH-E	AP0124BH-E	AP0154BH-E	AP0184BH-E
201	43723020	CASE, FAN, LEFT	1	1	1	2	2
202	43126119	CASE, FAN, RIGHT	1	1	1	2	2
203	43155179	CAPACITOR	1	1	1		
205	43155191	CAPACITOR				1	1
206	4312C008	MOTOR, FAN				1	1
207	4312C024	MOTOR, FAN	1	1	1		
208	43146707	MOTOR, PMV	1	1	1	1	1
209	43146713	VALVE, PMV	1	1	1		
210	43146726	BODY, PMV				1	1
211	43120232	FAN, MULTI BLADE	1	1	1	2	2
212	43180294	FILTER	1	1	1		
213	43180295	FILTER				1	1
214	43170206	CATCH, DRAIN	1	1	1	1	1
215	4314J429	EVAPORATOR ASSY	1	1	1		
216	4314J430	EVAPORATOR ASSY				1	1
218	4314Q035	DISTRIBUTOR ASSY	1	1	1		
219	4314Q036	DISTRIBUTOR ASSY				1	1
221	43047685	NUT, FLARE, 1/4 IN	1	1	1	1	1
222	43149355	NUT, FLARE, 3/8, IN	1	1	1		
223	43049776	SOCKET	1	1	1		
224	43149351	SOCKET	1	1	1	1	1
225	43047688	NUT, FLARE, 1/2, IN				1	1
227	43149353	SOCKET				1	1
229	43122046	PLATE-WIND	2	2	2		
230	43170197	HOSE ASSY	1	1	1	1	1
231	43107215	HOLDER, SENSOR	1	1	1	1	1
232	43047609	BONNET	1	1	1		
233	43147195	BONNET, 1/2 IN				1	1
235	43049697	BONNET	1	1	1	1	1
236	43139154	BAND, MOTOR, LEFT	2	2	2	2	2
237	43139155	BAND, MOTOR, RIGHT	2	2	2	2	2
238	43122104	BASE, MOTOR	1	1	1	1	1
239	43019904	HOLDER, SENSOR (TS)	2	2	2	2	2
240	43170207	STRAINER	1	1	1	1	1
241	43111311	HINS	1	1	1	1	1
242	43149314	SHEET, PMV	1	1	1	1	1
243	43147664	STRAINER				1	1
244	43147724	STRAINER	1	1	1		
245	43166011	REMOTE CONTROLLER, SX-A4EE	1	1	1	1	1
246	43166012	REMOTE CONTROLLER, SX-A5EE	1	1	1	1	1
247	43166004	REMOTE CONTROLLER, SX-A11JE2	1	1	1	1	1
248	43166006	REMOTE CONTROLLER, WH-H1JE2	1	1	1	1	1
249	431S8205	OWNER'S MANUAL, MMY-MAP0804HT8-E	1	1	1	1	1
251	4314Q043	STRAINER	1	1	1		

Location No.	Part No.	Description	MML-				
			AP0074BH-TR	AP0094BH-TR	AP0124BH-TR	AP0154BH-TR	AP0184BH-TR
201	43723020	CASE, FAN, LEFT	1	1	1	2	2
202	43126119	CASE, FAN, RIGHT	1	1	1	2	2
203	43155179	CAPACITOR	1	1	1		
205	43155191	CAPACITOR				1	1
206	4312C008	MOTOR, FAN				1	1
207	4312C024	MOTOR, FAN	1	1	1		
208	43146707	MOTOR, PMV	1	1	1	1	1
209	43146713	VALVE, PMV	1	1	1		
210	43146726	BODY, PMV				1	1
211	43120232	FAN, MULTI BLADE	1	1	1	2	2
212	43180294	FILTER	1	1	1		
213	43180295	FILTER				1	1
214	43170206	CATCH, DRAIN	1	1	1	1	1
215	4314J429	EVAPORATOR ASSY	1	1	1		
216	4314J430	EVAPORATOR ASSY				1	1
218	4314Q035	DISTRIBUTOR ASSY	1	1	1		
219	4314Q036	DISTRIBUTOR ASSY				1	1
221	43047685	NUT, FLARE, 1/4 IN	1	1	1	1	1
222	43149355	NUT, FLARE, 3/8, IN	1	1	1		
223	43049776	SOCKET	1	1	1		
224	43149351	SOCKET	1	1	1	1	1
225	43047688	NUT, FLARE, 1/2, IN				1	1
227	43149353	SOCKET				1	1
229	43122046	PLATE-WIND	2	2	2		
230	43170197	HOSE ASSY	1	1	1	1	1
231	43107215	HOLDER, SENSOR	1	1	1	1	1
232	43047609	BONNET	1	1	1		
233	43147195	BONNET, 1/2 IN				1	1
235	43049697	BONNET	1	1	1	1	1
236	43139154	BAND, MOTOR, LEFT	2	2	2	2	2
237	43139155	BAND, MOTOR, RIGHT	2	2	2	2	2
238	43122104	BASE, MOTOR	1	1	1	1	1
239	43019904	HOLDER, SENSOR (TS)	2	2	2	2	2
240	43170207	STRAINER	1	1	1	1	1
241	43111311	HINS	1	1	1	1	1
242	43149314	SHEET, PMV	1	1	1	1	1
243	43147664	STRAINER				1	1
244	43147724	STRAINER	1	1	1		
245	43166011	REMOTE CONTROLLER, SX-A4EE	1	1	1	1	1
246	43166012	REMOTE CONTROLLER, SX-A5EE	1	1	1	1	1
247	43166004	REMOTE CONTROLLER, SX-A11JE2	1	1	1	1	1
248	43166006	REMOTE CONTROLLER, WH-H1JE2	1	1	1	1	1
250	431S8206	OWNER'S MANUAL, MMY-MAP0804HT8-TR	1	1	1	1	1
251	4314Q043	STRAINER	1	1	1		

MML-AP0244BH*

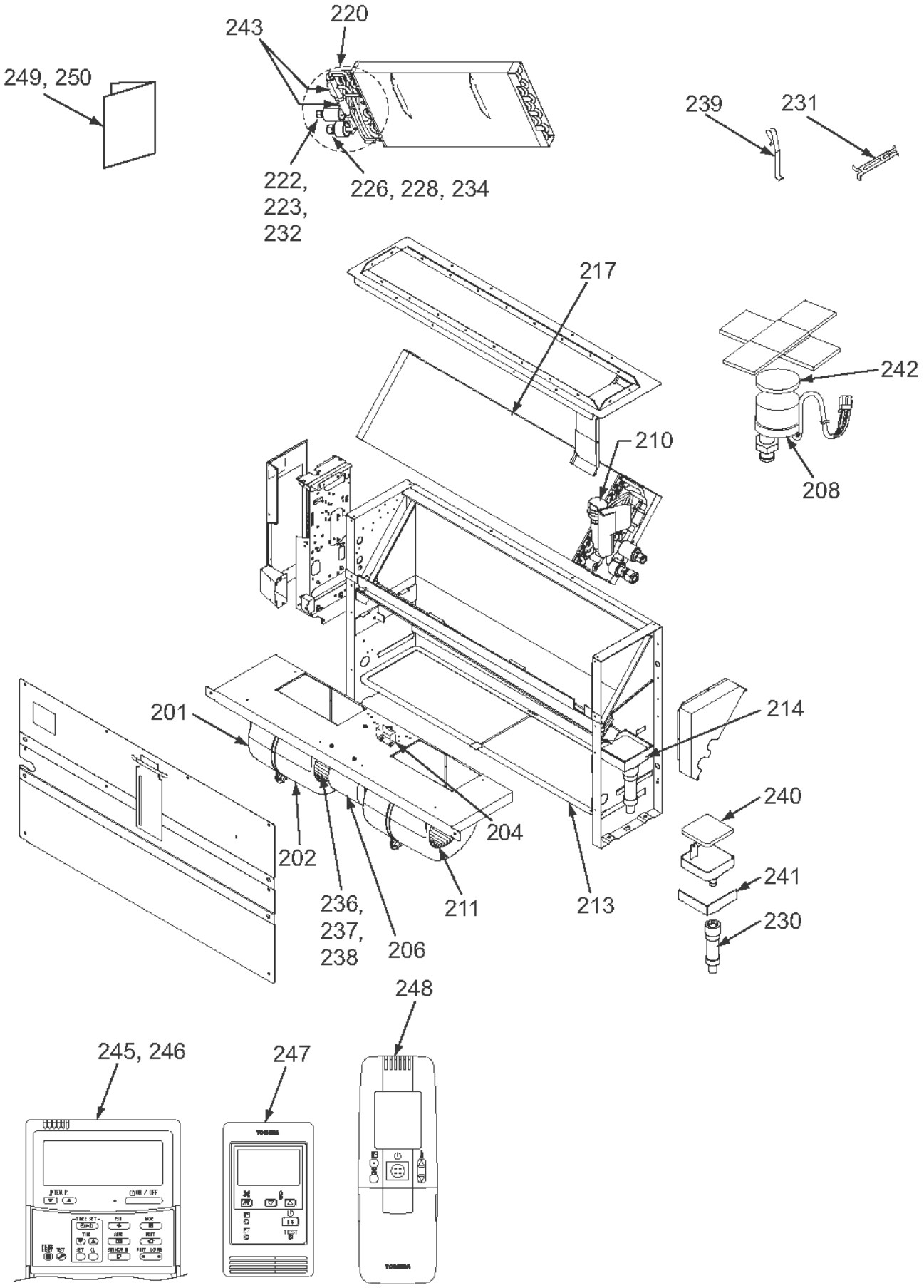

Location No.	Part No.	Description	MML-AP0244BH-E
201	43723020	CASE, FAN, LEFT	2
202	43126119	CASE, FAN, RIGHT	2
204	43155171	CAPACITOR	1
206	4312C008	MOTOR, FAN	1
208	43146707	MOTOR, PMV	1
210	43146726	BODY, PMV	1
211	43120232	FAN, MULTI BLADE	2
213	43180295	FILTER	1
214	43170206	CATCH, DRAIN	1
217	4314J431	EVAPORATOR ASSY	1
220	4314Q037	DISTRIBUTOR ASSY	1
222	43149355	NUT, FLARE, 3/8, IN	1
223	43049776	SOCKET	1
226	43149352	NUT, FLARE, 5/8, IN	1
228	43149354	SOCKET	1
230	43170197	HOSE ASSY	1
231	43107215	HOLDER, SENSOR	1
232	43047609	BONNET	1
234	43194029	BONNET	1
236	43139154	BAND, MOTOR, LEFT	2
237	43139155	BAND, MOTOR, RIGHT	2
238	43122104	BASE, MOTOR	1
239	43019904	HOLDER, SENSOR (TS)	2
240	43170207	STRAINER	1
241	43111311	HINS	1
242	43149314	SHEET, PMV	1
243	43147664	STRAINER	1
245	43166011	REMOTE CONTROLLER, SX-A4EE	1
246	43166012	REMOTE CONTROLLER, SX-A5EE	1
247	43166004	REMOTE CONTROLLER, SX-A11JE2	1
248	43166006	REMOTE CONTROLLER, WH-H1JE2	1
249	431S8205	OWNER'S MANUAL, MMY-MAP0804HT8-E	1

Location No.	Part No.	Description	MML-AP0244BH-TR
201	43723020	CASE, FAN, LEFT	2
202	43126119	CASE, FAN, RIGHT	2
204	43155171	CAPACITOR	1
206	4312C008	MOTOR, FAN	1
208	43146707	MOTOR, PMV	1
210	43146726	BODY, PMV	1
211	43120232	FAN, MULTI BLADE	2
213	43180295	FILTER	1
214	43170206	CATCH, DRAIN	1
217	4314J431	EVAPORATOR ASSY	1
220	4314Q037	DISTRIBUTOR ASSY	1
222	43149355	NUT, FLARE, 3/8, IN	1
223	43049776	SOCKET	1
226	43149352	NUT, FLARE, 5/8, IN	1
228	43149354	SOCKET	1
230	43170197	HOSE ASSY	1
231	43107215	HOLDER, SENSOR	1
232	43047609	BONNET	1
234	43194029	BONNET	1
236	43139154	BAND, MOTOR, LEFT	2
237	43139155	BAND, MOTOR, RIGHT	2
238	43122104	BASE, MOTOR	1
239	43019904	HOLDER, SENSOR (TS)	2
240	43170207	STRAINER	1
241	43111311	HINS	1
242	43149314	SHEET, PMV	1
243	43147664	STRAINER	1
245	43166011	REMOTE CONTROLLER, SX-A4EE	1
246	43166012	REMOTE CONTROLLER, SX-A5EE	1
247	43166004	REMOTE CONTROLLER, SX-A11JE2	1
248	43166006	REMOTE CONTROLLER, WH-H1JE2	1
250	431S8206	OWNER'S MANUAL, MMY-MAP0804HT8-TR	1

E-Parts

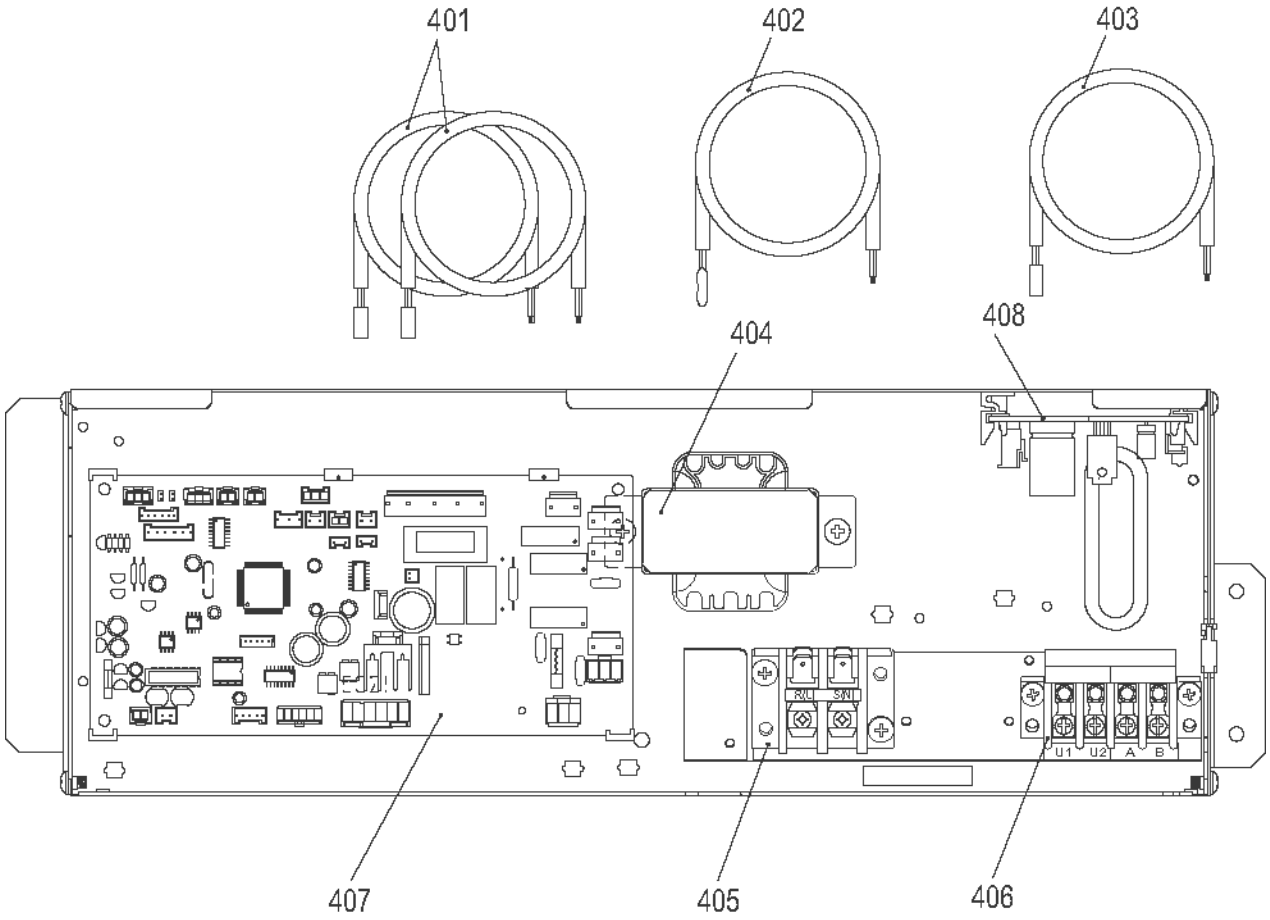

Location No.	Part No.	Description	MML-				
			AP0074BH-E(TR)	AP0094BH-E(TR)	AP0124BH-E(TR)	AP0154BH-E(TR)	AP0184BH-E(TR)
401	43050425	SENSOR ASSY, SERVICE, TC	2	2	2	2	2
402	43050426	SENSOR, SERVICE, TA	1	1	1	1	1
403	43150320	SENSOR ASSY, SERVICE, TG	1	1	1	1	1
404	43158204	TRANSFORMER	1	1	1	1	1
405	43160575	TERMINAL BLOCK, 2P, 20A	1	1	1	1	1
406	43160582	TERMINAL, 4P	1	1	1	1	1
407	4316V444	P.C. BOARD ASSY, MCC-1403	1	1	1	1	1
408	4316V345	P.C. BOARD ASSY, MCC-1520	1	1	1	1	1

Location No.	Part No.	Description	MML-
			AP0244BH-E(TR)
401	43050425	SENSOR ASSY, SERVICE, TC	2
402	43050426	SENSOR, SERVICE, TA	1
403	43150320	SENSOR ASSY, SERVICE, TG	1
404	43158204	TRANSFORMER	1
405	43160575	TERMINAL BLOCK, 2P, 20A	1
406	43160582	TERMINAL, 4P	1
407	4316V444	P.C. BOARD ASSY, MCC-1403	1
408	4316V345	P.C. BOARD ASSY, MCC-1520	1

9-10. Floor standing cabinet type

MML-AP0074H*, AP0094H*, AP0124H*, AP0154H*, AP0184H*

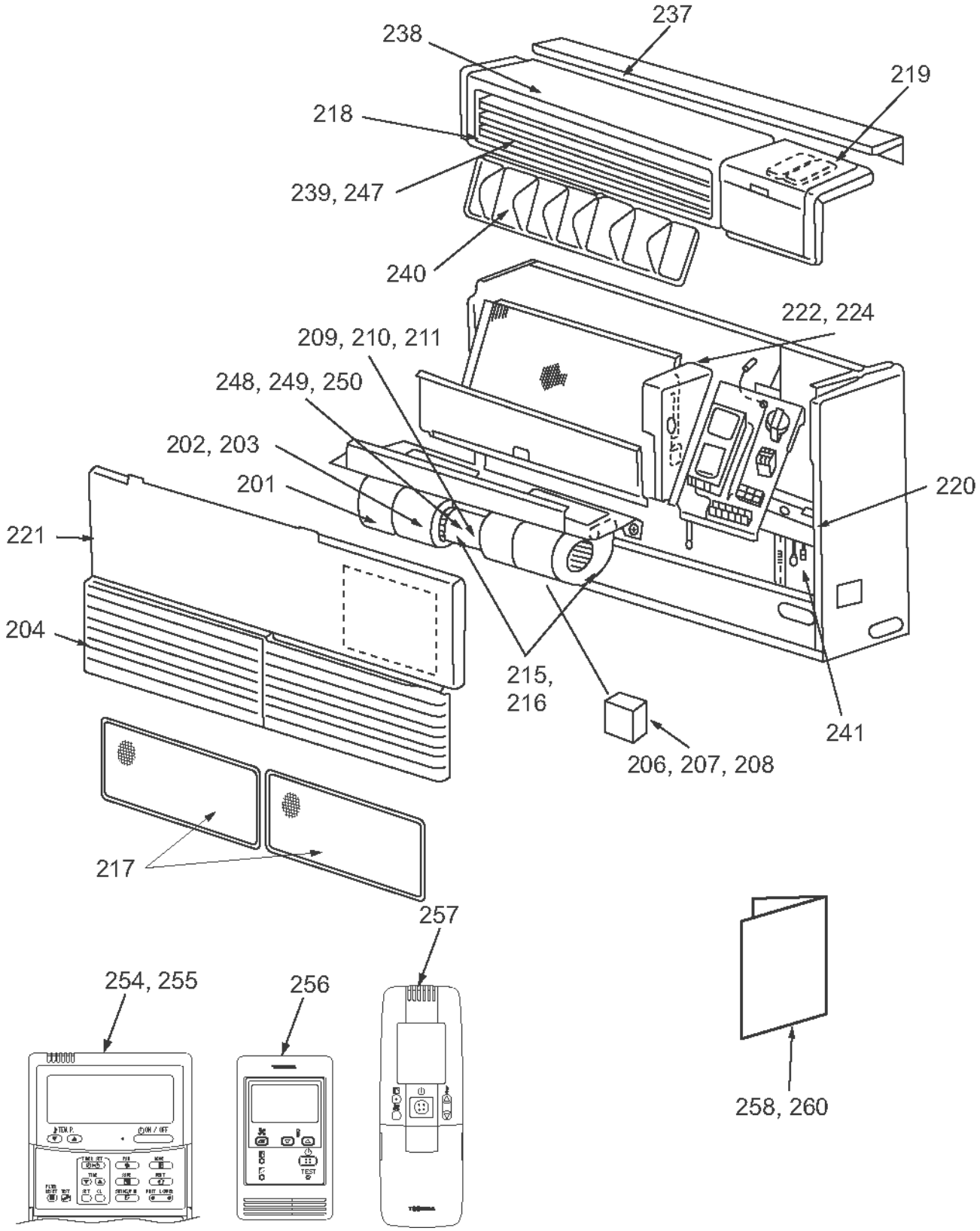

MML-AP0074H*, AP0094H*, AP0124H*, AP0154H*, AP0184H*

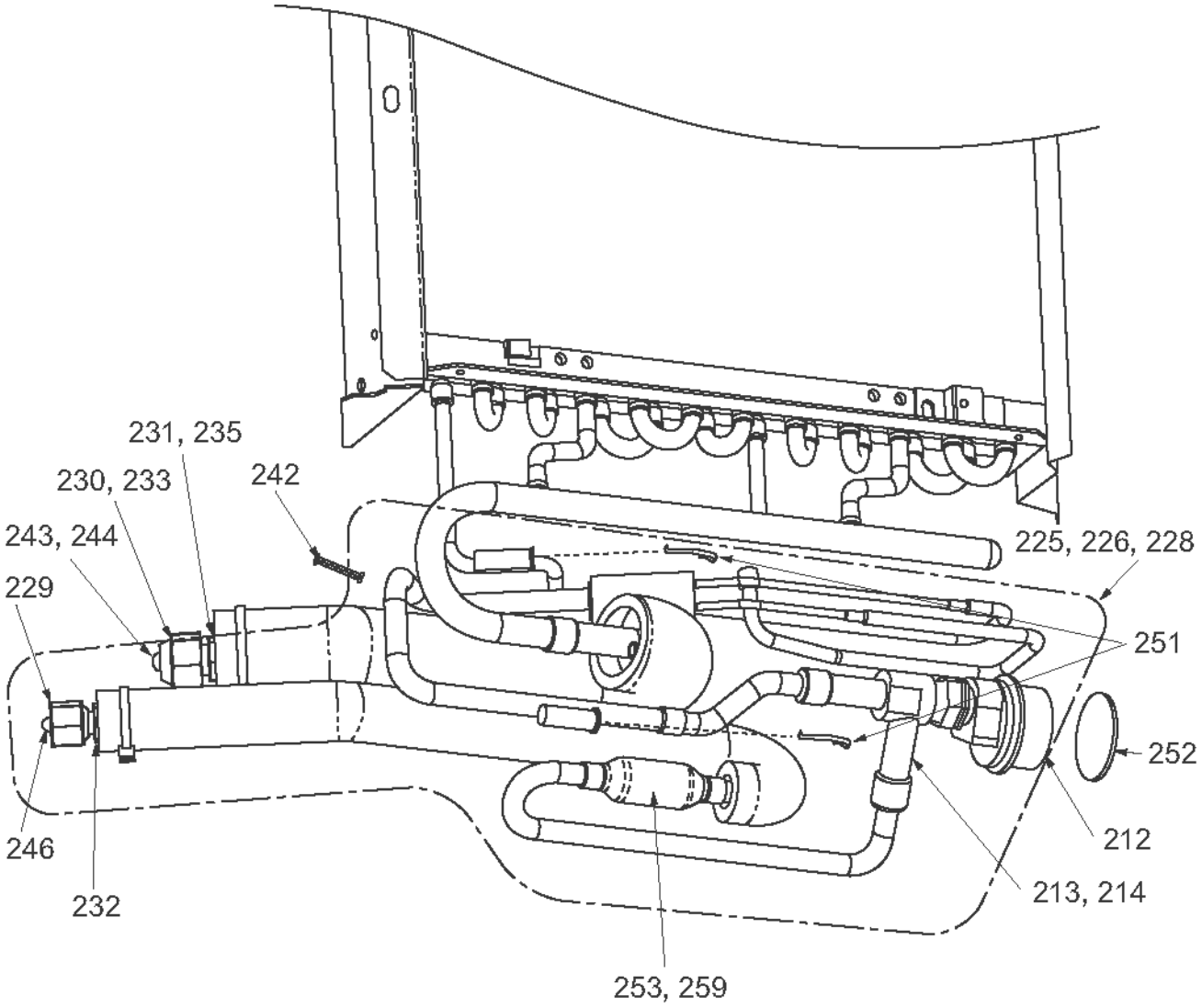

Location No.	Part No.	Description	MML-				
			AP0074H-E	AP0094H-E	AP0124H-E	AP0154H-E	AP0184H-E
201	43723020	CASE, FAN, LEFT	2	2	2	2	2
202	43723019	CASE, FAN, RIGHT	2	2	2	2	
203	43126119	CASE, FAN, RIGHT					2
204	43109394	GRILL, INLET, WHITE	2	2	2	2	2
206	43155190	CAPACITOR			1	1	
207	43155171	CAPACITOR					1
208	43155195	CAPACITOR	1	1			
209	4312C007	MOTOR, FAN			1	1	
210	4312C008	MOTOR, FAN					1
211	4312C026	MOTOR, FAN	1	1			
212	43146707	MOTOR, PMV	1	1	1	1	1
213	43146713	VALVE, PMV	1	1			
214	43146726	BODY, PMV			1	1	1
215	43120228	FAN, MULTI BLADE	2	2	2	2	
216	43120232	FAN, MULTI BLADE					2
217	43180280	AIR FILTER	2	2	2	2	2
218	43101346	FRAME, WHITE	1	1	1	1	1
219	43101347	COVER, CONTROL PANEL, WHITE	1	1	1	1	1
220	43172101	PAN, DRAIN	1	1	1	1	1
221	43100366	PANEL, FRONT	1	1	1	1	1
222	4314J419	EVAPORATOR ASSY	1	1	1	1	
224	4314J420	EVAPORATOR ASSY					1
225	4314Q044	DISTRIBUTOR ASSY	1	1			
226	4314Q045	DISTRIBUTOR ASSY			1	1	
228	4314Q074	DISTRIBUTOR ASSY					1
229	43047685	NUT, FLARE, 1/4 IN	1	1	1	1	1
230	43149355	NUT, FLARE, 3/8, IN	1	1	1		
231	43049776	SOCKET	1	1	1		
232	43149351	SOCKET	1	1	1	1	1
233	43047688	NUT, FLARE, 1/2, IN				1	1
235	43149353	SOCKET				1	1
237	43100374	CABINET, UPPER, WHITE	1	1	1	1	1
238	43100228	OUTLET, WHITE	1	1	1	1	1
239	43109395	GRILLE, WHITE	3	3	3	3	3
240	43109240	GRILLE	1	1	1	1	1
241	43170201	HOSE, DRAIN	1	1	1	1	1
242	43107215	HOLDER, SENSOR	1	1	1	1	1
243	43047609	BONNET	1	1	1		
244	43047692	BONNET				1	1
246	43049697	BONNET	1	1	1	1	1
247	43196087	BUSHING, GRILLE	6	6	6	6	6
248	43139154	BAND, MOTOR, LEFT	2	2	2	2	2
249	43139155	BAND, MOTOR, RIGHT	2	2	2	2	2
250	43122104	BASE, MOTOR	1	1	1	1	1
251	43019904	HOLDER, SENSOR (TS)	2	2	2	2	2
252	43149314	SHEET, PMV	1	1	1	1	1
253	43147664	STRAINER	1	1	1	1	1
254	43166011	REMOTE CONTROLLER, SX-A4EE	1	1	1	1	1
255	43166012	REMOTE CONTROLLER, SX-A5EE	1	1	1	1	1
256	43166004	REMOTE CONTROLLER, SX-A11JE2	1	1	1	1	1
257	43166006	REMOTE CONTROLLER, WH-H1JE2	1	1	1	1	1
258	431S8205	OWNER'S MANUAL, MMY-MAP0804HT8-E	1	1	1	1	1
259	43147649	STRAINER	1	1	1		

Location No.	Part No.	Description	MML-				
			AP0074H-TR	AP0094H-TR	AP0124H-TR	AP0154H-TR	AP0184H-TR
201	43723020	CASE, FAN, LEFT	2	2	2	2	2
202	43723019	CASE, FAN, RIGHT	2	2	2	2	
203	43126119	CASE, FAN, RIGHT					2
204	43109394	GRILL, INLET, WHITE	2	2	2	2	2
206	43155190	CAPACITOR			1	1	
207	43155171	CAPACITOR					1
208	43155195	CAPACITOR	1	1			
209	4312C007	MOTOR, FAN			1	1	
210	4312C008	MOTOR, FAN					1
211	4312C026	MOTOR, FAN	1	1			
212	43146707	MOTOR, PMV	1	1	1	1	1
213	43146713	VALVE, PMV	1	1			
214	43146726	BODY, PMV			1	1	1
215	43120228	FAN, MULTI BLADE	2	2	2	2	
216	43120232	FAN, MULTI BLADE					2
217	43180280	AIR FILTER	2	2	2	2	2
218	43101346	FRAME, WHITE	1	1	1	1	1
219	43101347	COVER, CONTROL PANEL, WHITE	1	1	1	1	1
220	43172101	PAN, DRAIN	1	1	1	1	1
221	43100366	PANEL, FRONT	1	1	1	1	1
222	4314J419	EVAPORATOR ASSY	1	1	1	1	
224	4314J420	EVAPORATOR ASSY					1
225	4314Q044	DISTRIBUTOR ASSY	1	1			
226	4314Q045	DISTRIBUTOR ASSY			1	1	
228	4314Q074	DISTRIBUTOR ASSY					1
229	43047685	NUT, FLARE, 1/4 IN	1	1	1	1	1
230	43149355	NUT, FLARE, 3/8, IN	1	1	1		
231	43049776	SOCKET	1	1	1		
232	43149351	SOCKET	1	1	1	1	1
233	43047688	NUT, FLARE, 1/2, IN				1	1
235	43149353	SOCKET				1	1
237	43100374	CABINET, UPPER, WHITE	1	1	1	1	1
238	43100228	OUTLET, WHITE	1	1	1	1	1
239	43109395	GRILLE, WHITE	3	3	3	3	3
240	43109240	GRILLE	1	1	1	1	1
241	43170201	HOSE, DRAIN	1	1	1	1	1
242	43107215	HOLDER, SENSOR	1	1	1	1	1
243	43047609	BONNET	1	1	1		
244	43047692	BONNET				1	1
246	43049697	BONNET	1	1	1	1	1
247	43196087	BUSHING, GRILLE	6	6	6	6	6
248	43139154	BAND, MOTOR, LEFT	2	2	2	2	2
249	43139155	BAND, MOTOR, RIGHT	2	2	2	2	2
250	43122104	BASE, MOTOR	1	1	1	1	1
251	43019904	HOLDER, SENSOR (TS)	2	2	2	2	2
252	43149314	SHEET, PMV	1	1	1	1	1
253	43147664	STRAINER	1	1	1	1	1
254	43166011	REMOTE CONTROLLER, SX-A4EE	1	1	1	1	1
255	43166012	REMOTE CONTROLLER, SX-A5EE	1	1	1	1	1
256	43166004	REMOTE CONTROLLER, SX-A11JE2	1	1	1	1	1
257	43166006	REMOTE CONTROLLER, WH-H1JE2	1	1	1	1	1
259	43147649	STRAINER	1	1	1		
260	431S8206	OWNER'S MANUAL, MMY-MAP0804HT8-TR	1	1	1	1	1

MML-AP0244H*

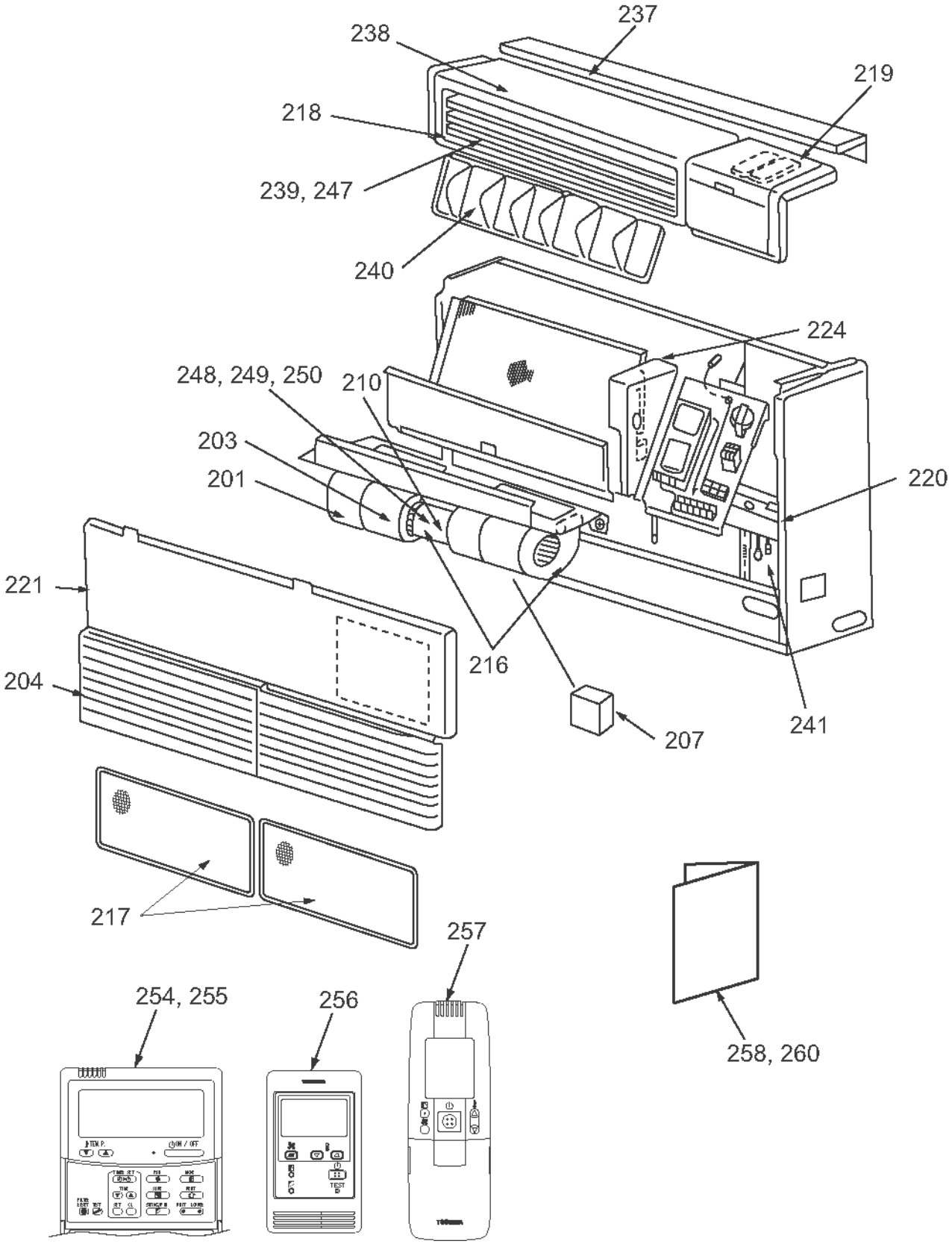
237
238
219
218
239, 247
240
224
248, 249, 250
210
203
201
220
221
216
204
207
241
217
257
254, 255
256
258, 260

MML-AP0244H***

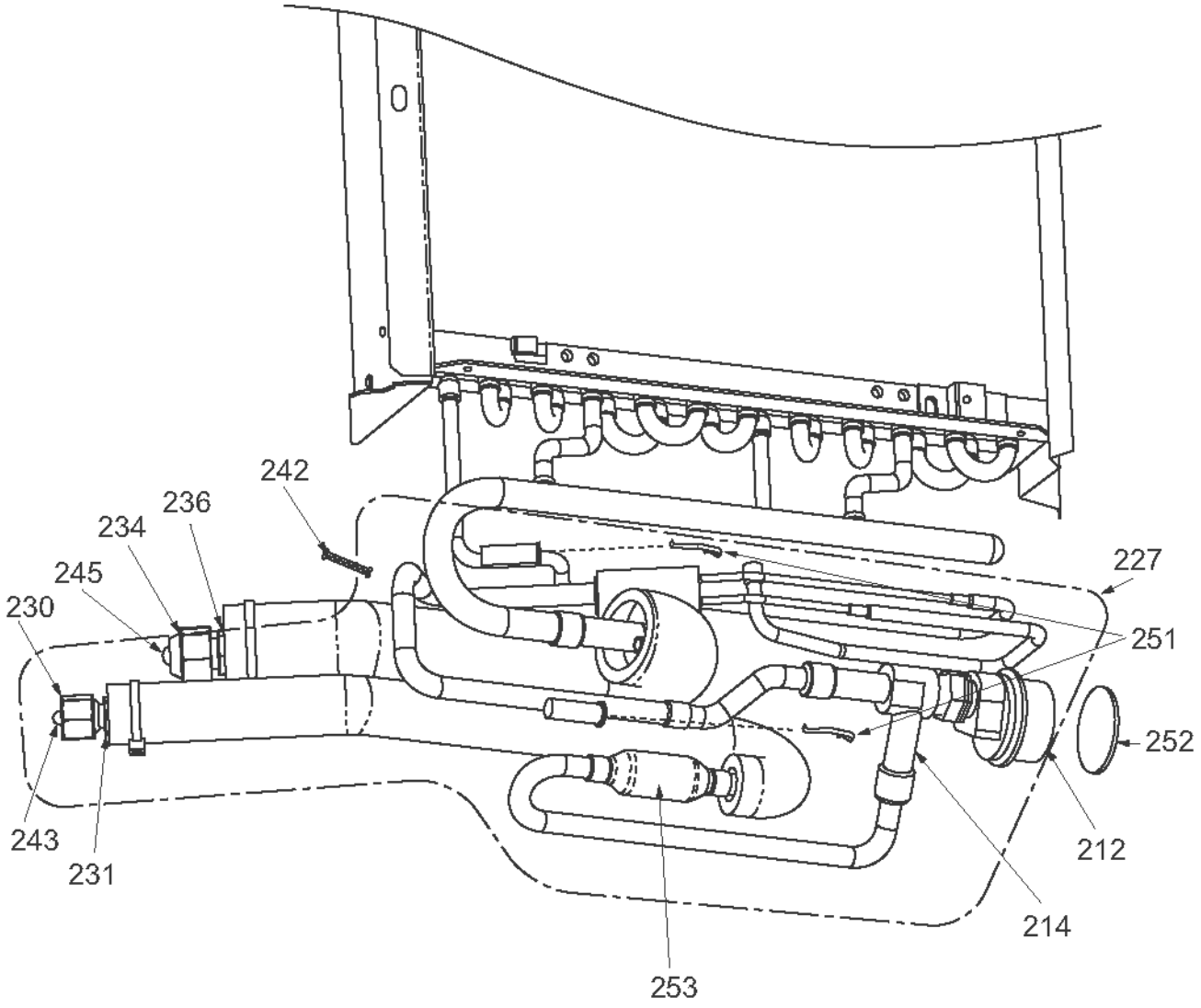

Location No.	Part No.	Description	MML-AP0244H-E
201	43723020	CASE, FAN, LEFT	2
203	43126119	CASE, FAN, RIGHT	2
204	43109394	GRILL, INLET, WHITE	2
207	43155171	CAPACITOR	1
210	4312C008	MOTOR, FAN	1
212	43146707	MOTOR, PMV	1
214	43146726	BODY, PMV	1
216	43120232	FAN, MULTI BLADE	2
217	43180280	AIR FILTER	2
218	43101346	FRAME, WHITE	1
219	43101347	COVER, CONTROL PANEL, WHITE	1
220	43172101	PAN, DRAIN	1
221	43100366	PANEL, FRONT	1
224	4314J420	EVAPORATOR ASSY	1
227	4314Q046	DISTRIBUTOR ASSY	1
230	43149355	NUT, FLARE, 3/8, IN	1
231	43049776	SOCKET	1
234	43149352	NUT, FLARE, 5/8, IN	1
236	43149354	SOCKET	1
237	43100374	CABINET, UPPER, WHITE	1
238	43100228	OUTLET, WHITE	1
239	43109395	GRILLE, WHITE	3
240	43109240	GRILLE	1
241	43170201	HOSE, DRAIN	1
242	43107215	HOLDER, SENSOR	1
243	43047609	BONNET	1
245	43194029	BONNET	1
247	43196087	BUSHING, GRILLE	6
248	43139154	BAND, MOTOR, LEFT	2
249	43139155	BAND, MOTOR, RIGHT	2
250	43122104	BASE, MOTOR	1
251	43019904	HOLDER, SENSOR (TS)	2
252	43149314	SHEET, PMV	1
253	43147664	STRAINER	1
254	43166011	REMOTE CONTROLLER, SX-A4EE	1
255	43166012	REMOTE CONTROLLER, SX-A5EE	1
256	43166004	REMOTE CONTROLLER, SX-A11JE2	1
257	43166006	REMOTE CONTROLLER, WH-H1JE2	1
258	431S8205	OWNER'S MANUAL, MMY-MAP0804HT8-E	1

Location No.	Part No.	Description	MML-AP0244H-TR
201	43723020	CASE, FAN, LEFT	2
203	43126119	CASE, FAN, RIGHT	2
204	43109394	GRILL, INLET, WHITE	2
207	43155171	CAPACITOR	1
210	4312C008	MOTOR, FAN	1
212	43146707	MOTOR, PMV	1
214	43146726	BODY, PMV	1
216	43120232	FAN, MULTI BLADE	2
217	43180280	AIR FILTER	2
218	43101346	FRAME, WHITE	1
219	43101347	COVER, CONTROL PANEL, WHITE	1
220	43172101	PAN, DRAIN	1
221	43100366	PANEL, FRONT	1
224	4314J420	EVAPORATOR ASSY	1
227	4314Q046	DISTRIBUTOR ASSY	1
230	43149355	NUT, FLARE, 3/8, IN	1
231	43049776	SOCKET	1
234	43149352	NUT, FLARE, 5/8, IN	1
236	43149354	SOCKET	1
237	43100374	CABINET, UPPER, WHITE	1
238	43100228	OUTLET, WHITE	1
239	43109395	GRILLE, WHITE	3
240	43109240	GRILLE	1
241	43170201	HOSE, DRAIN	1
242	43107215	HOLDER, SENSOR	1
243	43047609	BONNET	1
245	43194029	BONNET	1
247	43196087	BUSHING, GRILLE	6
248	43139154	BAND, MOTOR, LEFT	2
249	43139155	BAND, MOTOR, RIGHT	2
250	43122104	BASE, MOTOR	1
251	43019904	HOLDER, SENSOR (TS)	2
252	43149314	SHEET, PMV	1
253	43147664	STRAINER	1
254	43166011	REMOTE CONTROLLER, SX-A4EE	1
255	43166012	REMOTE CONTROLLER, SX-A5EE	1
256	43166004	REMOTE CONTROLLER, SX-A11JE2	1
257	43166006	REMOTE CONTROLLER, WH-H1JE2	1
260	431S8206	OWNER'S MANUAL, MMY-MAP0804HT8-TR	1

E-Parts

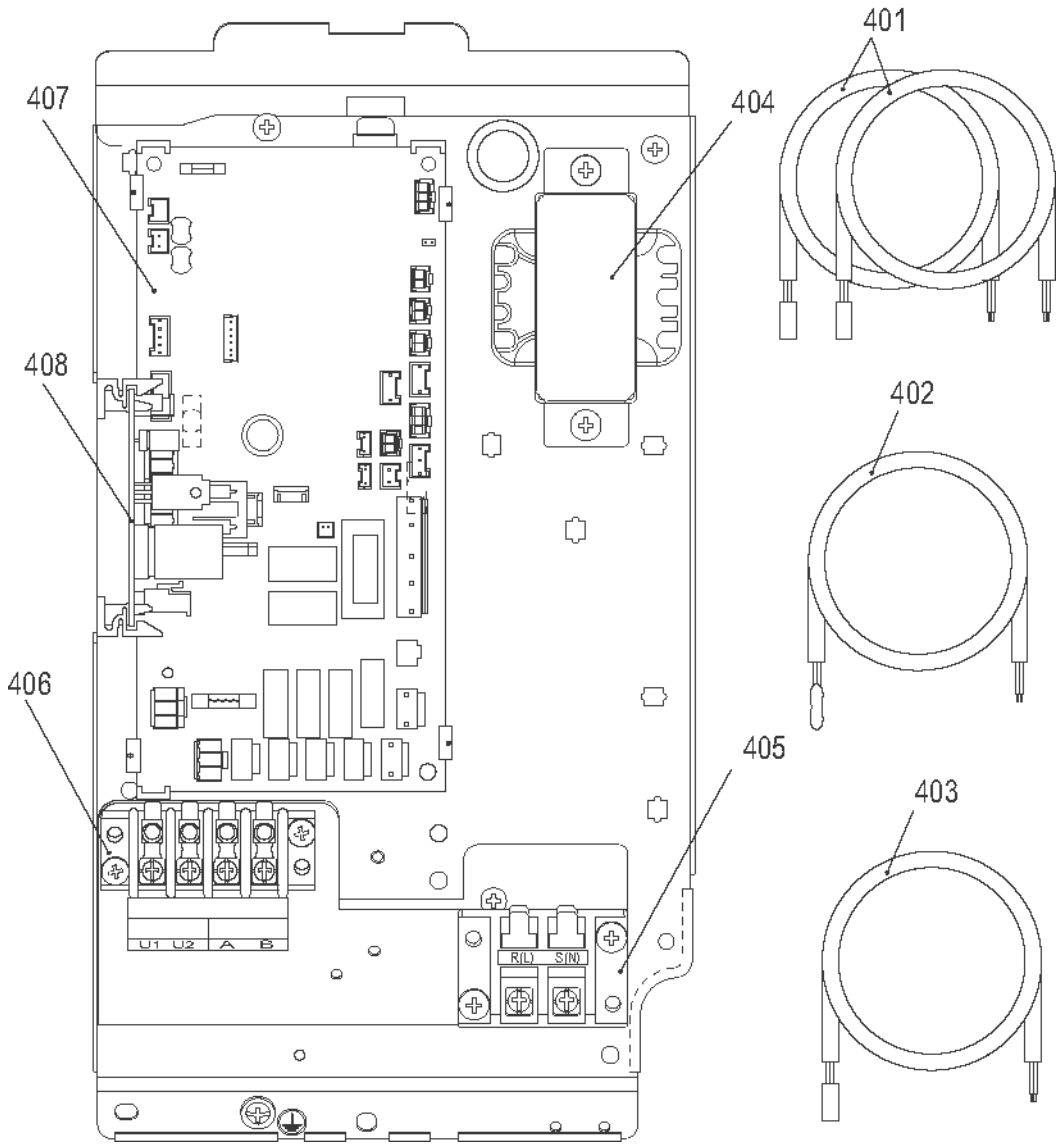

Location No.	Part No.	Description	MML-				
			AP0074H-E(TR)	AP0094H-E(TR)	AP0124H-E(TR)	AP0154H-E(TR)	AP0184H-E(TR)
401	43050425	SENSOR ASSY, SERVICE	2	2	2	2	2
402	43050426	SENSOR, SERVICE	1	1	1	1	1
403	43150320	SENSOR ASSY, SERVICE	1	1	1	1	1
404	43158204	TRANSFORMER	1	1	1	1	1
405	43160575	TERMINAL BLOCK, 2P, 20A	1	1	1	1	1
406	43160582	TERMINAL, 4P	1	1	1	1	1
407	4316V469	P.C. BOARD ASSY, MCC-1403	1	1	1	1	1
408	4316V345	P.C. BOARD ASSY, MCC-1520	1	1	1	1	1

Location No.	Part No.	Description	MML-
			AP0244H-E(TR)
401	43050425	SENSOR ASSY, SERVICE	2
402	43050426	SENSOR, SERVICE	1
403	43150320	SENSOR ASSY, SERVICE	1
404	43158204	TRANSFORMER	1
405	43160575	TERMINAL BLOCK, 2P, 20A	1
406	43160582	TERMINAL, 4P	1
407	4316V469	P.C. BOARD ASSY, MCC-1403	1
408	4316V345	P.C. BOARD ASSY, MCC-1520	1

10. FAN CHARACTERISTICS

Conceald Duct Standard Type

MMD-AP0074BH*, AP0094BH*

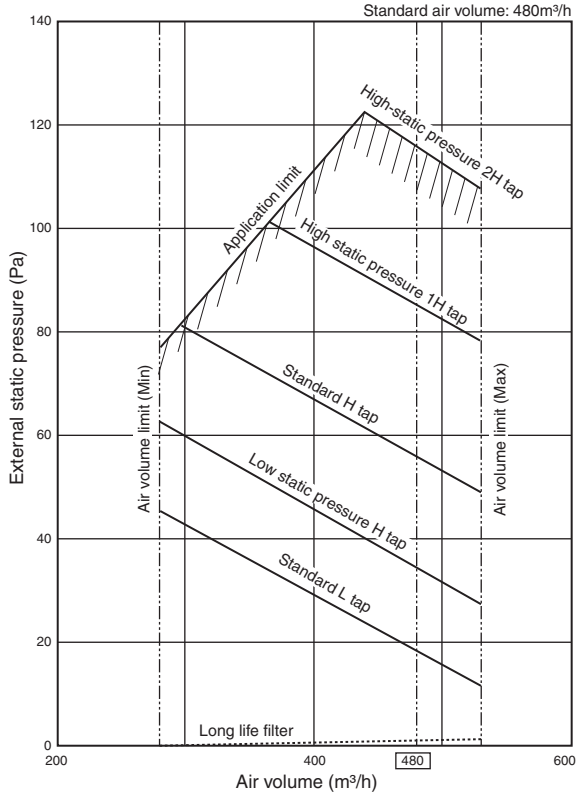

MMD-AP0124BH*

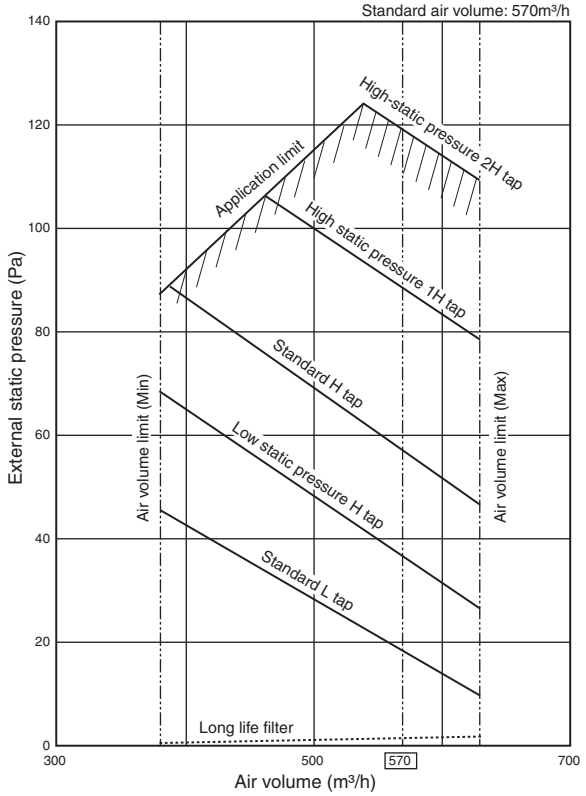

MMD-AP0154BH*

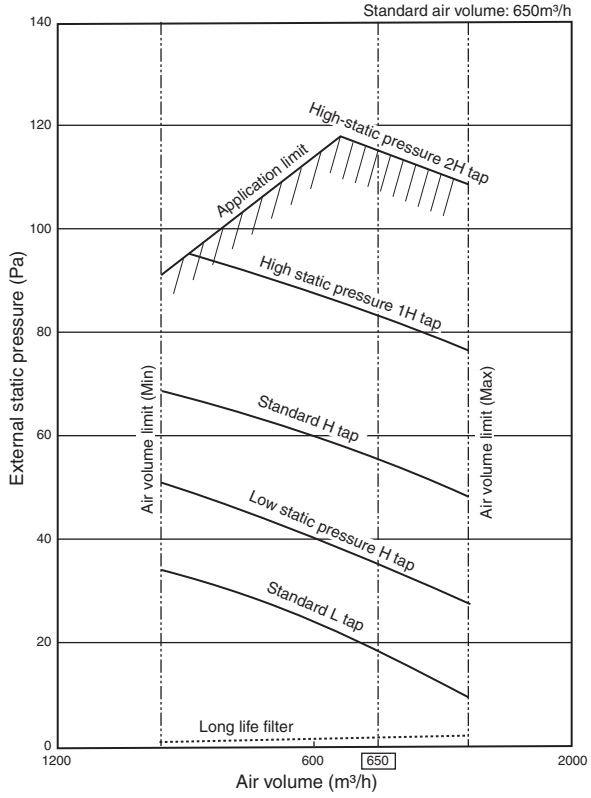

MMD-AP0184BH*

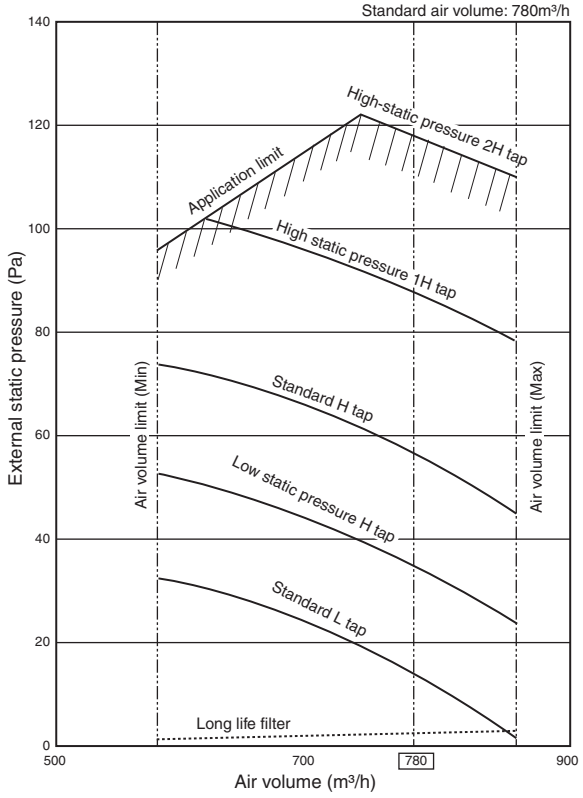

MMD-AP0244BH*, AP0274BH*

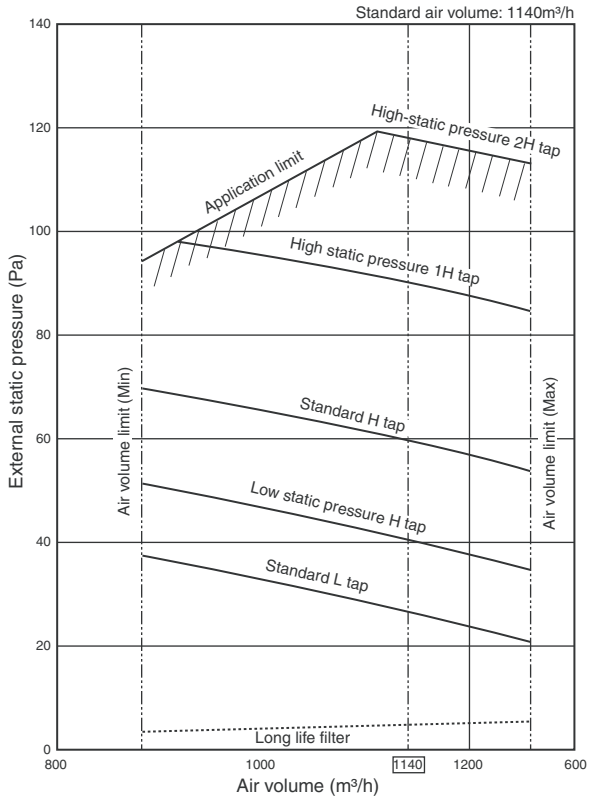

MMD-AP0304BH*

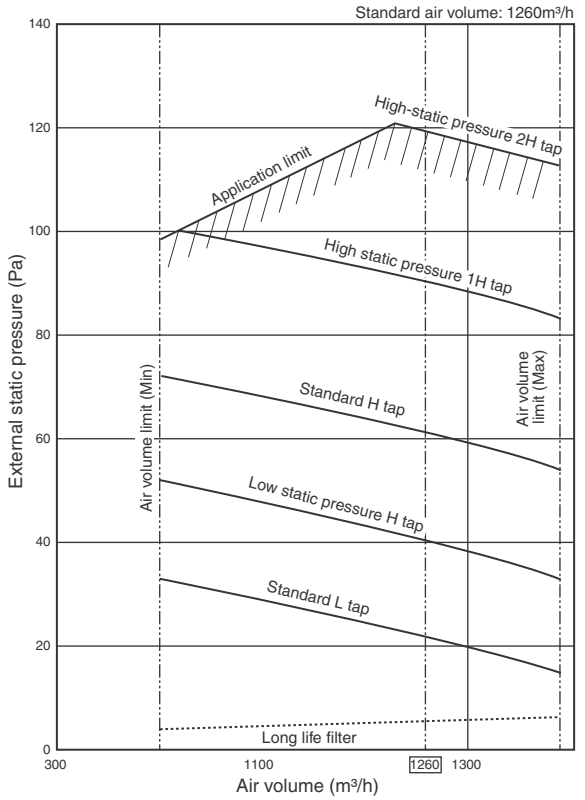

MMD-AP0364BH*

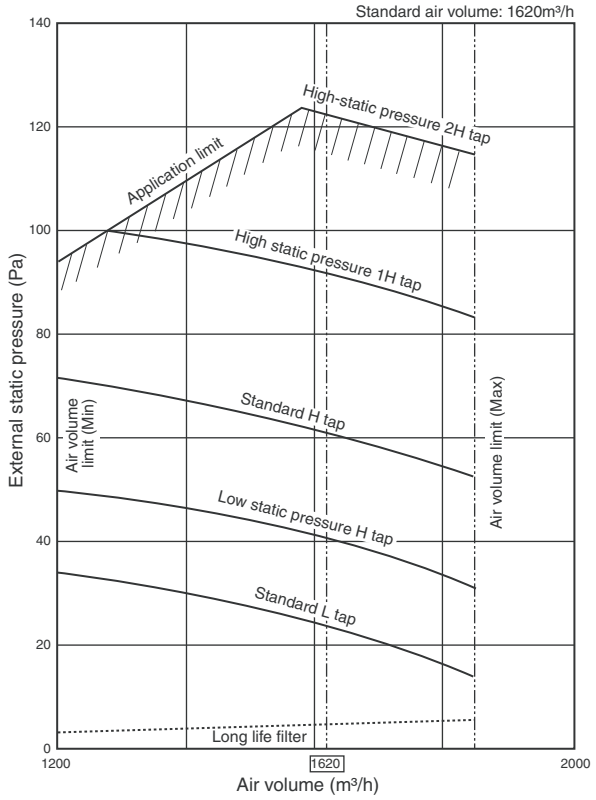

MMD-AP0484BH*, AP0564BH*

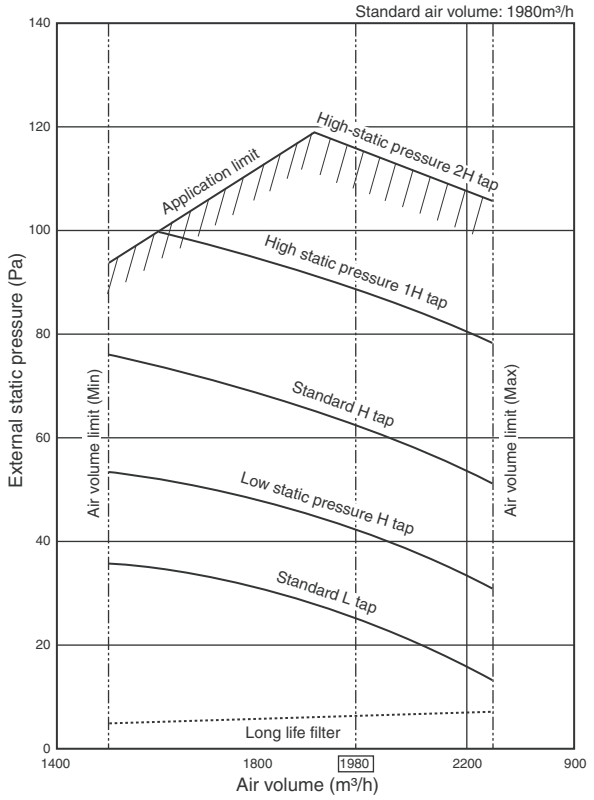

Concealed Duct High Static Pressure type

MMD-AP0184H*

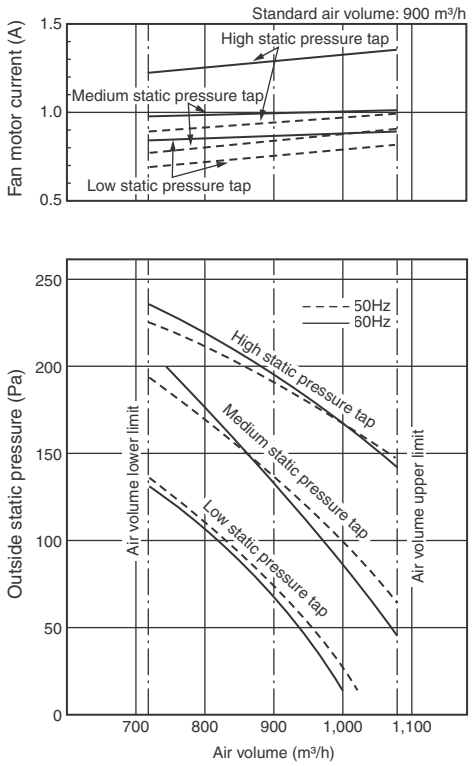

MMD-AP0244H*, AP0274H*

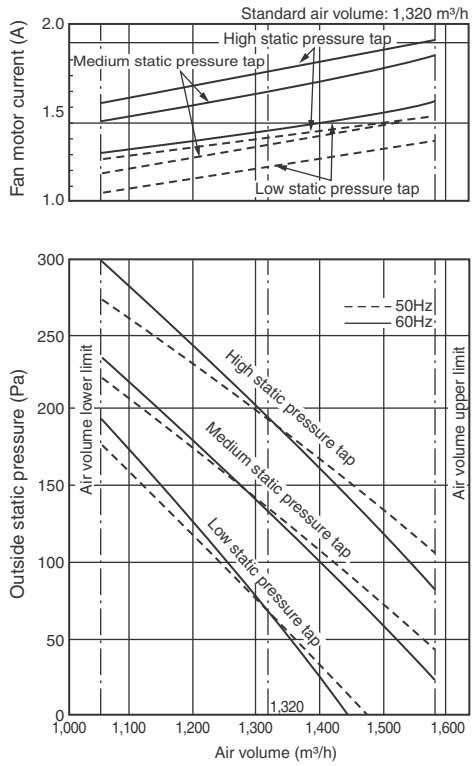

MMD-AP0364H*

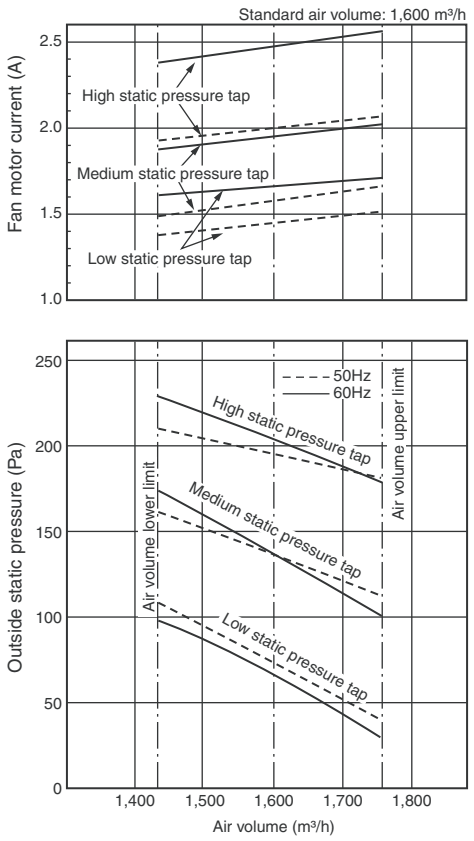

MMD-AP0484H*

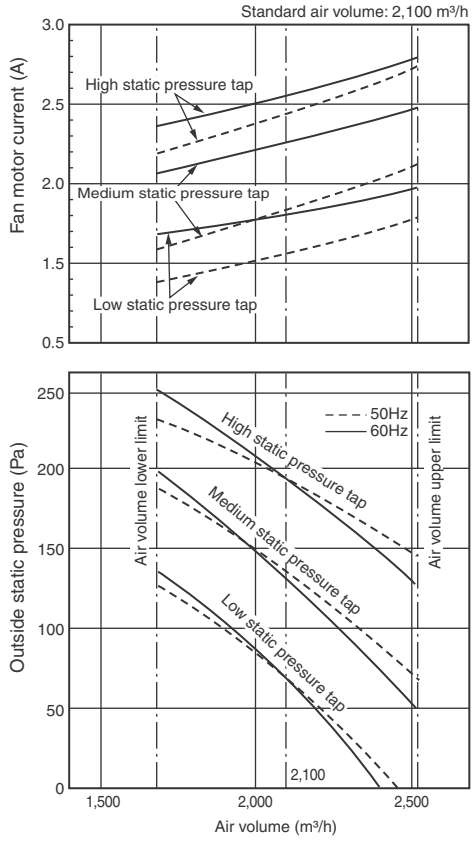

Slim Duct (Filter attached)
MMD-AP0054SPH*

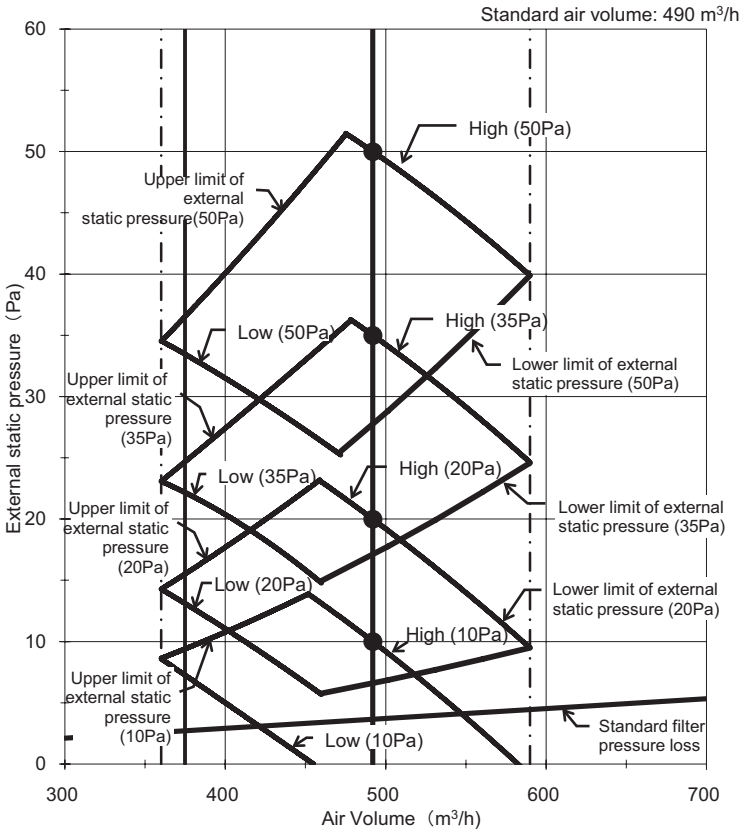

MMD-AP0074SPH*
MMD-AP0094SPH*

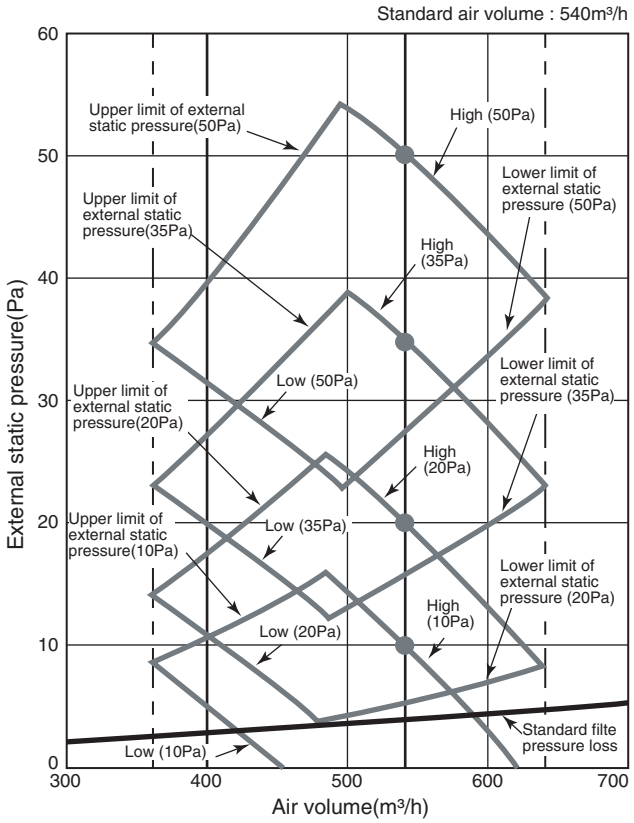

MMD-AP0124SPH*

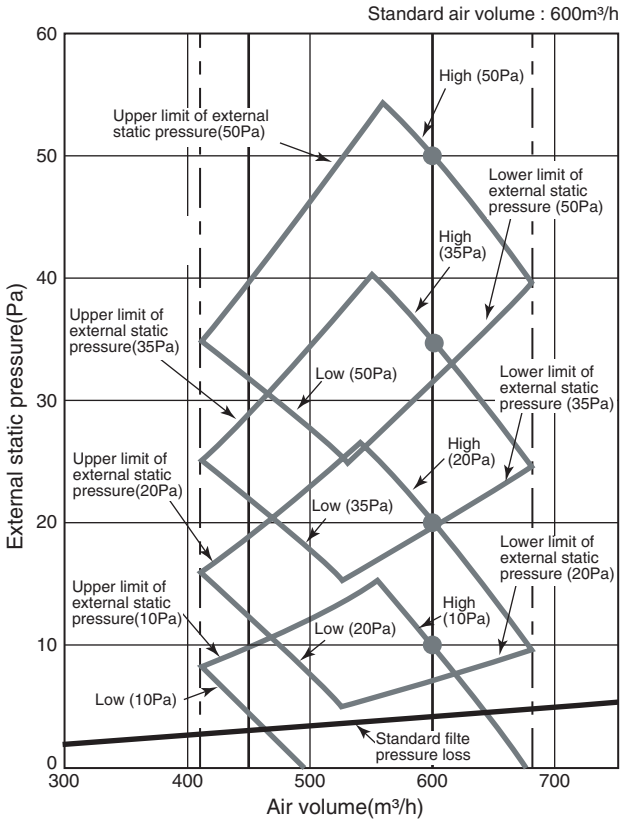

MMD-AP0154SPH*

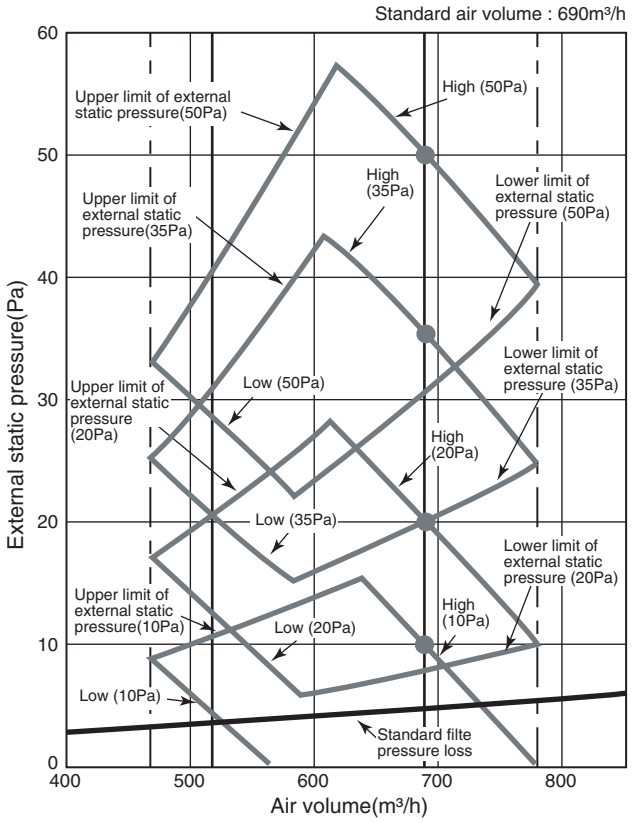

MMD-AP0184SPH*

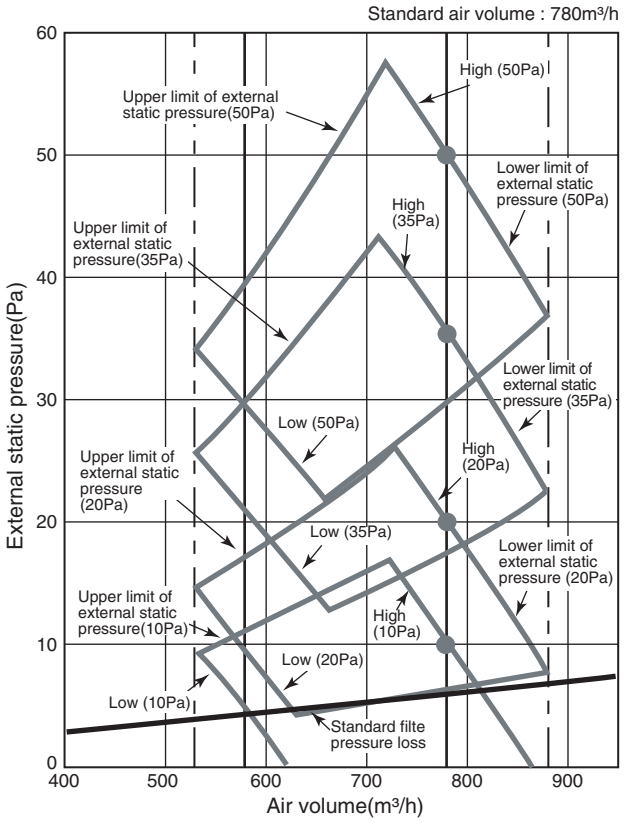

Slim Duct (No Filter)
MMD-AP0054SPH*

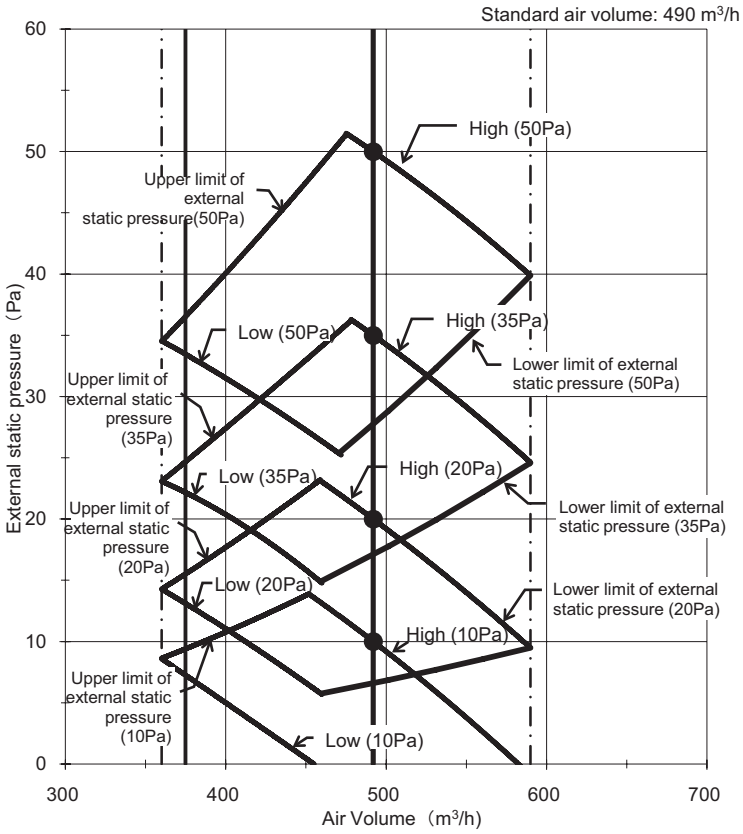

MMD-AP0074SPH*
MMD-AP0094SPH*

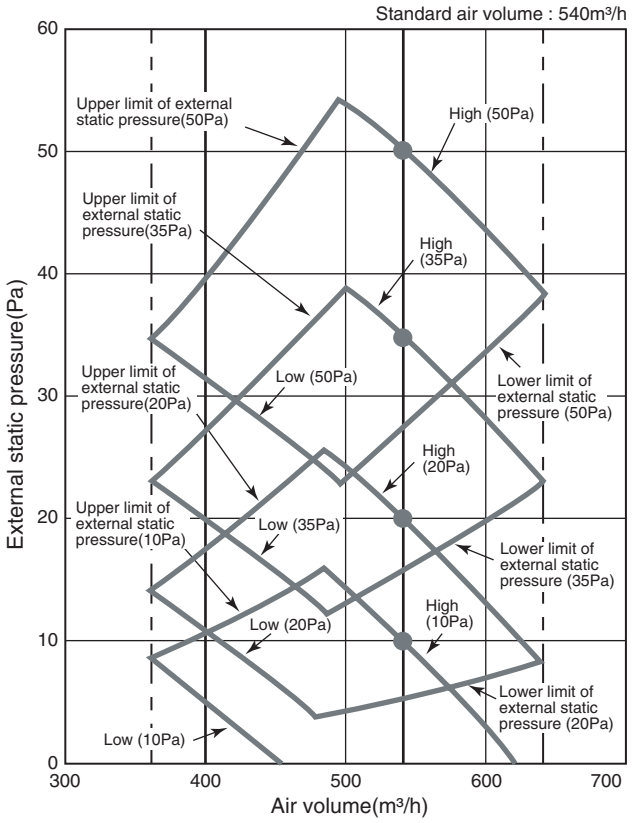

MMD-AP0124SPH*

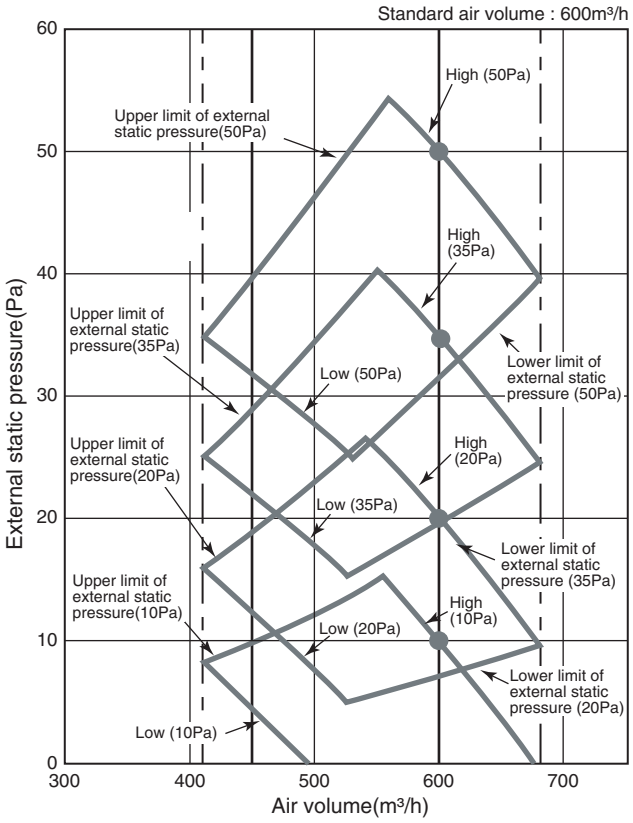

MMD-AP0154SPH*

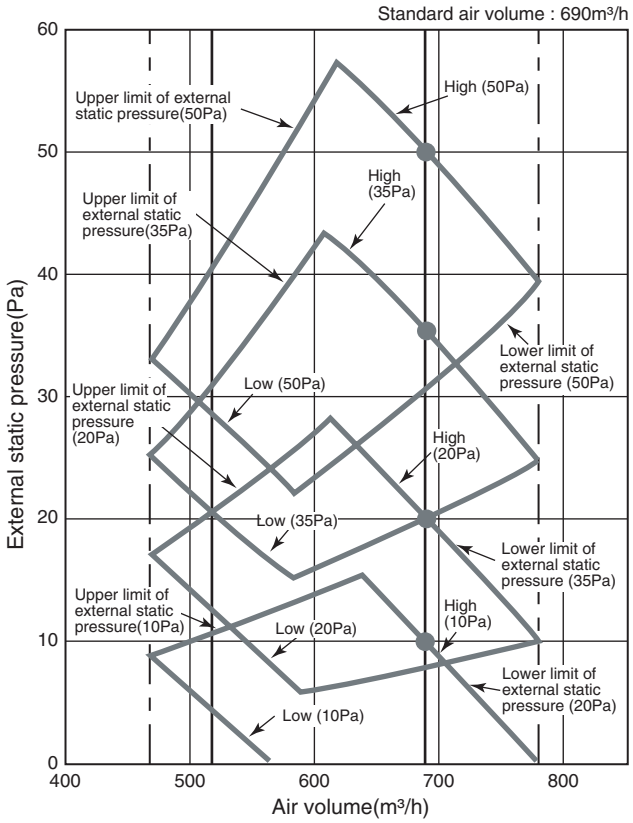

MMD-AP0184SPH*

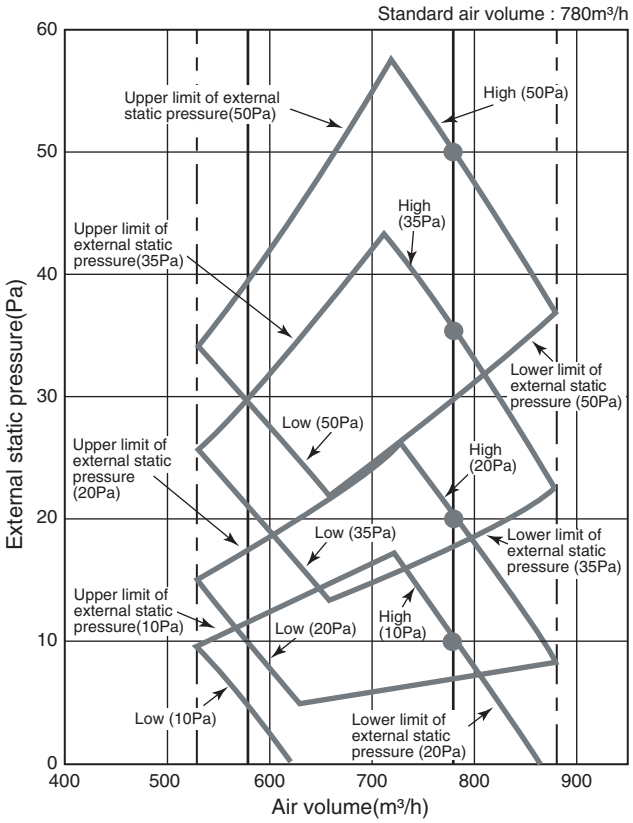

WARNINGS ON REFRIGERANT LEAKAGE

Check of Concentration Limit

The room in which the air conditioner is to be installed requires a design that in the event of refrigerant gas leaking out, its concentration will not exceed a set limit.
The refrigerant R410A which is used in the air conditioner is safe, without the toxicity or combustibility of ammonia, and is not restricted by laws to be imposed which protect the ozone layer. However, since it contains more than air, it poses the risk of suffocation if its concentration should rise excessively. Suffocation from leakage of R410A is almost non-existent. With the recent increase in the number of high concentration buildings, however, the installation of multi air conditioner systems is on the increase because of the need for effective use of floor space, individual control, energy conservation by curtailing heat and carrying power etc.
Most importantly, the multi air conditioner system is able to replenish a large amount of refrigerant compared with conventional individual air conditioners. If a single unit of the multi conditioner system is to be installed in a small room, select a suitable model and installation procedure so that if the refrigerant accidentally leaks out, its concentration does not reach the limit (and in the event of an emergency, measures can be made before injury can occur).
In a room where the concentration may exceed the limit, create an opening with adjacent rooms, or install mechanical ventilation combined with a gas leak detection device.
The concentration is as given below.

$$\frac{\text{Total amount of refrigerant (kg)}}{\text{Min. volume of the indoor unit installed room (m}^3\text{)}}$$

Concentration limit (kg/m^3)

The concentration limit of R410A which is used in multi air conditioners is 0.3 kg/m^3.

NOTE 1 :
If there are 2 or more refrigerating systems in a single refrigerating device, the amounts of refrigerant should be as charged in each independent device.

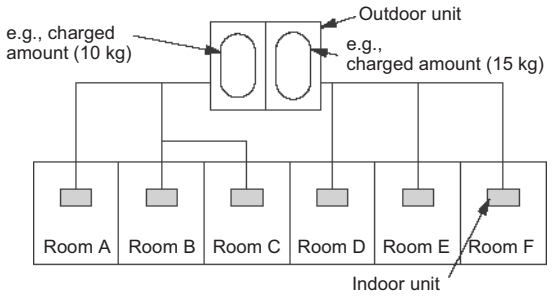

For the amount of charge in this example:
The possible amount of leaked refrigerant gas in rooms A, B and C is 10 kg.
The possible amount of leaked refrigerant gas in rooms D, E and F is 15 kg.

Important

NOTE 2 :
The standards for minimum room volume are as follows.
(1) No partition (shaded portion)

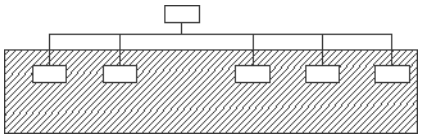

(2) When there is an effective opening with the adjacent room for ventilation of leaking refrigerant gas (opening without a door, or an opening 0.15 % or larger than the respective floor spaces at the top or bottom of the door).

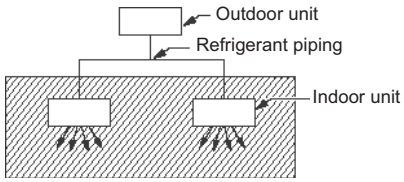

(3) If an indoor unit is installed in each partitioned room and the refrigerant piping is interconnected, the smallest room of course becomes the object. But when a mechanical ventilation is installed interlocked with a gas leakage detector in the smallest room where the density limit is exceeded, the volume of the next smallest room becomes the object.

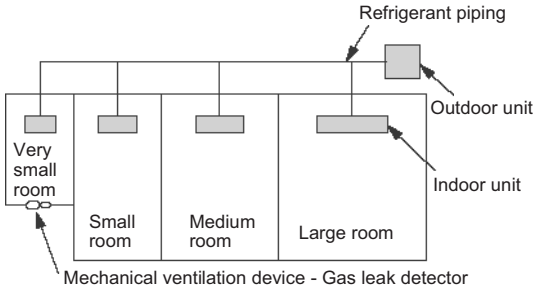

NOTE 3 :
The minimum indoor floor area compared with the amount of refrigerant is roughly as follows:
(When the ceiling is 2.7 m high)

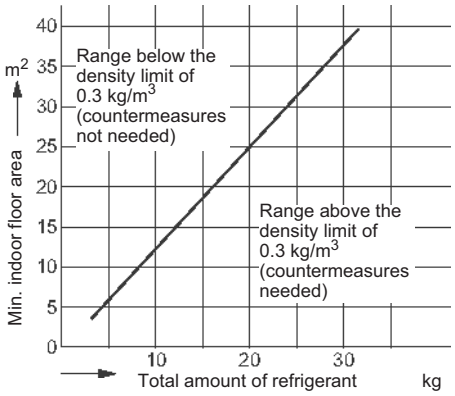

TOSHIBA CARRIER CORPORATION
72-34 Horikawa-cho, Saiwai-ku, Kawasaki-shi, Kanagawa 212-8585, JAPAN
Copyright © 2014 TOSHIBA CARRIER CORPORATION, ALL Rights Reserved.

Revision record

First issue	—	—	Apr, 2011
Revision 1	File volume down.	—	Mar. 2012
Revision 2	Indoor unit AP005 addition Fan characteristics addition	Cover, 11, 12, 13, 14, 20, 25, 27, 48, 50, 70 80, 104, 114, 124, 156, 157, 158, 159, 160, 161, 162, 163 2, 217-223	Jul. 2013
Revision 3	Change of service part number of PMV motor.	Page 157, 158, 161,162	Oct., 2014